FILE COPY

American Engineering Corporation

Engineers • Planners • Surveyors

RECEIVED DEC 14 1998

December 8, 1998

AEC Reference Nº: 9848

Mr. and Mrs. Heinz Pieniak
25107 8th Place S.
Des Moines, WA 98195

Subject: **Revision of Footing Recommendations on Residential Addition**

Dear Mr. and Mrs. Pieniak:

American Engineering Corporation's geotechnical report dated October 19, 1998 recommended that the existing 12–inch wide footing for the one–story residence be enlarged to 18 inches to support the proposed second story addition. Mike Mitchell of Mitchell Engineering, Inc. has provided definitive loading values for this addition. Calculated soil loading is about 111 pounds per square foot along the perimeter of the structure. Applying a factor of safety of 4 to this value still places the loads well within the anticipated soil bearing capacity of the foundation materials.

Based on these load calculations (attached) and the observed site conditions, we concur that the existing 12–inch wide foundation is adequate to support the proposed addition. We would like to visit the site to verify the actual conditions when the pier locations are excavated.

Sincerely,

AMERICAN ENGINEERING CORPORATION

RICHARD J. BIELEFELD, CEG
Engineering Geologist

EINAR GUNDERSEN, PE
Principal

EINAR GUNDERSEN STATE OF WASHINGTON REGISTERED PROFESSIONAL ENGINEER 12/8/98
EXPIRES 04-05-2000

Enclosures
RJB:mge

4032 148th Ave. N.E. Redmond, WA 98052 (425) 881-7430 Fax (425) 881-7731

FILE COPY

CITY OF DES MOINES
805 S 219th Street
Des Moines, Washington 98198
(206) 878-8626

FIRE HYDRANT AVAILABILITY

Complete this form and turn it in to the Fire Department listed below. Along with this form supply a detailed plot plan with address of adjoining property. Plot plan must be drawn to scale.

This form must be completed and signed by personnel from the appropriate agency to insure adequate water availability. The completed form and plot map must then be returned to the City of Des Moines Building Department as part of your application packet. This certificate provides the Engineering Department with information necessary to evaluate development proposals.

Property Address: 25107 8TH PLACE SOUTH

Legal Description: LOT POR BLOCK 48 + FIRST RAILROAD ADD TO DES MOINES
LOT 2 THRU 5 BLOCK 48 TGW 5100 FT OF N 125 FT BLOCK "C"
TGW LOTS 2 THRU 5 BLOCK 49 + E 1/2 VAL WATER ST ADJ
TGW LOTS 2 THRU 5 + BLOCK 54 + W 1/2 VAL WATER ST. ADJ
+ LOTS 17 THRU 20 BLOCK 54

Contact Person: MATTHEW A. PETERS

Telephone No.: (425) 485 3877

Water District Serving Property: #26

This work is for: ☐ New Construction ☒ Addition or Alteration

Presently Des Moines is serviced by:

South of 200th Street:

King County Fire District #26
2238 S 223rd Street
Des Moines, WA 98198
(206) 878-2210

North of 200th Street

King County Fire District #2
15100 8th Avenue Southwest
Burien, WA 98166
(206) 242-2040

FIRE DEPARTMENT USE ONLY

Gallons per minute required: _____ Gallons per minute available: 1000+

Distance to nearest hydrant: 130' Location of hydrant: 254 + 8TH

Sprinkler system required: ☐ Yes ☒ No Fire alarm required: ☐ Yes ☒ No

(300 feet maximum travel distance for residential)
(150 feet maximum travel distance for commercial)

Comments:

☒ **Approved** ☐ **Not Approved**

Approved By: R Biasolo
Fire Marshal

Date: 29 JUL 98

p:/forms/1018
04/17/98

Letter of Transmittal

RECEIVED NOV 16 1998

FILE

Amer. an Engineering Corporation
4032 148th Avenue NE
Redmond, WA 98052
Tel. (425) 881-7430
Fax. (425) 881-7731

TO:

FILE COPY

City of Des Moines
805 S. 219th
Des Moines, WA 98198–6393

DATE	JOB NO.
November 2, 1998	9848

ATTENTION
ENGINEERING DEPARTMENT

RE
PIENIAK RESIDENCE

SUMMARY GEOTECH REPORT

_WE ARE SENDING YOU ■ Attached ☐ Under separate cover via Mail the following items:

☐ Shop drawings ☐ Plans ☐ Specifications ☐ Samples

☐ Copy of letter ☐ _____

COPIES	DATE	NO.	DESCRIPTION
1			Summary Geology & Geotechnical Report for the Pieniak Residence,
			Des Moines

THESE ARE TRANSMITTED as checked below:

[ ] For approval [✔] For your use [✔] As requested [ ] For review and comment

[ ] Prints returned after loan to us [ ] _____

REMARKS:

Have sealed enclosed report per your request of LZL Construction.

RECEIVED NOV 16 1998

COPY TO: FILE

SIGNED: RJB

RICHARD J. BIELEFELD, CEG

American Engineering Corporation

FILE COPY

Engineers • Planners • Surveyors

October 19, 1998

AEC Job Nº: 9848

Mr. & Mrs. Heinz Pieniak
25107 8th Place South
Des Moines, WA 98195

Dear Pieniak:

American Engineering Corporation is pleased to provide this summary geotechnical site evaluation to support the construction of a second story addition to your residence located at the above address. This letter report responds to your approval of our proposal dated October 5, 1998

Location

The residence where the addition is proposed is located on the bluffs overlooking Puget Sound in the southwestern part of the city Des Moines. The site is situated about 500 feet north of the entrance to Saltwater State Park (Figure 1).

The residence which was constructed in about 1970 is situated between 8th Place South and the west facing bluff. The western front at the structure is approximately 40 feet from the top of the bluff. Single family residences are located both north and south of this residence.

Project Description

The proposed second story addition is to be added to the south section of the existing residence. The addition will extend the length of the residence about 57 feet with a width of about 24 feet to the north. The structure will bear on the existing ground floor and original footings except along the western face where a moment frame structure will transfer the loads across the 24-foot width to two piers and footings. American Engineering Corporation has reviewed the building addition plans prepared by LZL Construction and with the enclosed recommendations find them satisfactory for construction.

Site conditions

The construction site is located on relatively flat terrain within a fully developed residential area. The residence is approximately 140 feet above the level of Puget Sound and about 200 feet horizontally from the high tide line. The bluff is inclined at a peak gradient of about 200% (70°) for part of its height. The upper 20 to 25 feet of the bluff has been stabilized using pressure treated timber with buried concrete deadmen to support the tiebacks.

4032 148th Ave. N.E. Redmond, WA 98052 (425) 881-7430 Fax (425) 881-7731

The site is readily accessible, well drained, and compatible to wet weather construction. Permanent drainage is already installed to collect storm runoff discharge through a tight line to the toe of the bluff.

Foundation Conditions

The residence is bearing on a glacial till formation identified on the Geological Map of the Des Moines Quadrangle as Ground Moraine Till (Qgt). This soil consists of compact, unoxidized glacial till formed from of sand and gravel. There is approximately 20 percent silt and clay in the soils and very few grave-sized particles greater than 2 inches in nominal diameter. The soils stand nearly vertical in trenches dug to 2 feet in depth and in cuts up to 4 feet deep on the bluff edge. While soils tests were not performed, it is our opinion that these soils will provide a minimum of 3000 psf bearing capacity.

The Salmon Springs formation underlies the Ground Moraine Till. This geologic unit consists of sand and gravel with thin beds of peat and organic-rich silt. These soils are also well consolidated. The Salmon Springs unit tends to carry ground water that, when seeping from the bluff, tends to undermine and cause slope failures. This is a common form of slope failure along this bluff line. The Salmon Springs unit will not affect the foundation bearing capacity of the site.

Seismicity

The site seismicity is directly influenced by the close proximity of the State of Washington's largest recorded earthquake (1941) epicenter of which was located only 2-3 miles from the site. This 7.1 magnitude earthquake is likely to have resulted in a horizontal acceleration of slightly over 0.2 g (acceleration due to gravity) and a shaking duration of about 30 seconds.

This motion is well within the UBC requirements which are:

Seismic Zone factor	Z = 0.3, Zone 3
Site coefficient	S_2
S-factor	1.2

There is no evidence in published records of liquefication, lurch cracking or subsidence as a result of this seismicity. It is possible that some amplification of shaking could occur on this site because of the proximity of the bluff; however, that shaking is expected to be within the level of the 0.2 g recommended (0.3 UBC).

Recommendation and conclusions

It is our opinion that the site is suitable for construction of the second story addition. The dense to very dense silt, sand and gravel will provide sound bearing for the added structural loads. No slope stability analysis has been performed for the site, but our literature research has not identified any recent large scale slides in the vicinity. It must be recognized that these bluffs do fail and will fail periodically. The

standard rule–of thumb is a failure of twenty feet every twenty years in various reaches of the bluff line through out the Puget Sound and Washington coast line.

It is our opinion that the moment frame will encounter satisfactory bearing soils at a depth of 24 inches along the western front of the structure. If soft ground is still encountered at the depth, the soft pockets may be over-excavated and replaced using crushed rock to bring the footing depth to 24 inches.

The perimeter, conventional spread footing supporting the present structure, is reported to be only 12–inches wide. This width is insufficient to provide suitable factor of safety. Therefore we recommend that the footing be widened to 18-inches by excavating along the outside of the footing and epoxying dowels every three (3) feet into both the footing and stemwall in a staggered pattern. If the footing is found to be at least 16-inches wide, no enlargement is required. At least one horizontal #4 rebar should be placed in the new footing to stiffen the member.

We recommend that our firm review the final design and specifications to confirm that the earthwork and foundation recommendations presented in this report have been properly interpreted and implemented by the design specifications. We also recommend that a representative from American Engineering Corporation be present onsite during the initial grading to verify that subsurface conditions are as anticipated, and that competent bearing soil is exposed. We can assume no responsibility for the misrepresentation of our recommendations if we do not review the plans and specifications, and monitor the earthwork.

The conclusions and recommendations presented in the report should be incorporated in the design and construction of the project to minimize any soils and/or foundation-related problems. Detailed earthwork and foundation recommendations for use in the design and construction of the project are presented in the following sections.

Earthwork

1. *Clearing and Site Preparation*
   The moment frame footprint should be cleared of all vegetation and debris. Holes resulting pier excavation should be cleaned and backfilled with suitable compacted material after all soils are removed. We recommend that the subsoils stripped for foundation construction be used for non–structural backfill around the foundation and retaining walls. Topsoil may be stockpiled for use as landscaping soil, but should not be mixed with the native soils to be used as structural fill.

2. *Temporary Excavations*
   We do not anticipate any temporary excavations to depths greater then 3-4 feet. If greater depths are required the excavations must comply with local, state, and federal safety regulations.

3. *Subgrade Preparation*
   No structural fill is expected to be used on this site. If compaction is required, the native sandy soils will readily compact to 90 percent of maximum dry density. The exposed foundation

subgrade soil should be scarified, dewatered, and recompacted to a depth of at least 6 inches prior to placing any foundation and spreadfooting. Field observations by the engineer's representative will facilitate this work.

4. Engineered Fill Layer

Any footing zones that require stabilization because of soft conditions and that are presently at grade should be overexcavated by one to two feet below grade to remove the soft wet soils, scarified, dewatered, subdrainage installed, and backfilled using crushed rock. This work is recommended to minimize possible differential settlement between the native and fill materials. The exposed surfaces should then be prepared in accordance with 3., *Subgrade Preparation*, of this report. Onsite soil or imported fill should be compacted in accordance with 6., *Compaction*, of this report.

5. Fill Material

Based on our site visit, it is our opinion that the soil underlying the vegetated surface can be recompacted if it is at optimum moisture content and if construction takes place in dry weather. Any excavated soils that do not meet the requirements of structural fill should not be used or mixed with any fill material, and should be disposed of offsite or used only for landscaping.

Imported structural fill must be observed and tested using Modified Proctor Compaction tests to determine the required compaction efficiency to attain 90 percent of maximum dry density. All fill material should be placed at, or slightly below the optimum moisture content and compacted to a minimum of 95 percent of the maximum dry density in the upper 2 feet and 90 percent below the 2–foot level. The quality of the structural fill will determine the number of compaction tests required during fill construction.

6. Compaction

The top 2 feet of all structural fill shall be compacted to 95 percent maximum relative density as determined by ASTM Designation D1557-78. All material below the 2–foot level shall be compacted to 90 percent of the same maximum dry density. Fill material should be spread and compacted in lifts not exceeding 6 inches in uncompacted thickness. Soils not passing the minimum standards identified in these recommendations will be rejected, re-excavated, and replaced. Compaction testing of the fill should be performed in 2-foot lifts and tests should be performed approximately every 50 feet across each fill layer.

7. Drainage

Onsite soils have been classified using the Unified Soils Classification System (USCS). Surficial soils are silty sand or clayey gravel. The soils appear to be relatively well drained. Perimeter footing drains are required for all structures. Surface water migrating downslope should be captured and diverted from the structural locations by grading and directed to prepared detention basins.

No water should be allowed to pond or infiltrate where foundations, slabs, or pavements are to be constructed. Any water encountered during foundation excavation should be directed into filter rock, subdrainage systems, or pumped out of the excavations. (No water is expected to

pond in any of the excavations.) The collected water can then be diverted to a positive and permanent point of discharge.

7.1. Perimeter Footing Drains

We recommend the installation of footing drains around the perimeter of all structures. These drains should consist of a 4-inch minimum diameter, perforated or slotted, rigid, PVC, drain pipe laid with the perforations or slot facing down at, or just below, the invert of the footing with a gradient sufficient to initiate flow. Clean outs should be installed at intervals for the maintenance of the drains over the long term. The drain line should be bedded on, surrounded by, and covered with a free-draining material that meets the requirements of Washington State Department of Transportation (WSDOT) Standard Specification, Section 9-03.12(2). See Table 7.

Table 1. WSDOT Standard Specifications, Section 9-03.12(2)

U.S. Sieve Size	Percent Passing*
4" square	100
¼" square	25 – 70
No. 200	5.0 max.

* All percentages are by weight.

Once drains are installed, the excavation can be backfilled with a granular fill material with the exception of the upper six inches. The surface 6 inches of fill should consist of compacted and relatively impermeable soil. It can be separated from the underlying, more granular, drainage material by a layer of geofabric or visqueen. The surface should be sloped to drain away from the building wall. Alternatively, the surface can be sealed with asphalt or concrete paving. All footing drain lines should be connected to a positive discharge, i.e. storm drain, or conducted by tightline to the bottom of the adjacent bluff.

8. Grading

Positive surface gradients should be provided adjacent to the building to direct surface water away from foundations and slabs toward suitable discharge facilities. We recommend that the ground be sloped at a minimum of 3 percent gradient for a distance at least 10 feet away from the structure. Similarly, roof downspouts must be connected to suitable discharge facilities. Ponding of surface water should not be allowed adjacent to any structures or pavement.

FOUNDATION SUPPORT

Spreadfootings

Foundation areas should be prepared as described in 3. and 4. of this report. Any conventional footings can be designed on the basis of the following criteria:

- Allowable bearing pressure on the native very dense sand and gravelly sand, including all dead and live loads ..... 3,000 psf
- A one-third increase in the bearing capacity can be used when considering short term transient loads.
- Minimum depth of perimeter footing below adjacent final exterior grade to account for frost penetration ..... 18 inches
- Piers: depth of footings..... 24 inches

Continuous footings should be designed with adequate top and bottom reinforcing to provide structural continuity and to permit spanning of local irregularities. We recommend that the footings be a minimum width of 18 inches.
Footings located adjacent to other footings or utility trenches should bear below an imaginary 1.5:1 (horizontal to vertical) plane projected upward from the bottom edge of the adjacent footings or utility trenches.

Construction Observation

American Engineering Corporation recommends that our office periodically monitor the progress of construction in order to confirm that site conditions are as reported in this report. Any modification of plans may then be done immediately.

The analysis, designs, opinions, and recommendations submitted in this report are based upon our site observations, knowledge of the site and experience with projects within the area. Variations of subsurface conditions from those analyzed or characterized in the report are possible and may become evident during construction. In that event, it may be advisable to re-evaluate certain analysis or assumptions.

We recommend that our firm be retained to provide geotechnical services during site grading, foundation excavation, subgrade preparation and backfilling to observe compliance with the design concepts, specifications, and recommendations presented in this report. Our presence will also allow us to modify the design if unanticipated subsurface conditions are encountered. The cost for two additional site visits has been included in our proposal cost estimate.

Report Preparation

This report was prepared by Richard J. Bielefeld, CEG, engineering geologist. This report was prepared under the supervision of a registered professional engineer in the State of Washington.

RICHARD J. BIELEFELD, CEG
Engineering Geologist

EINAR GUNDERSEN, PE
Principal Engineer

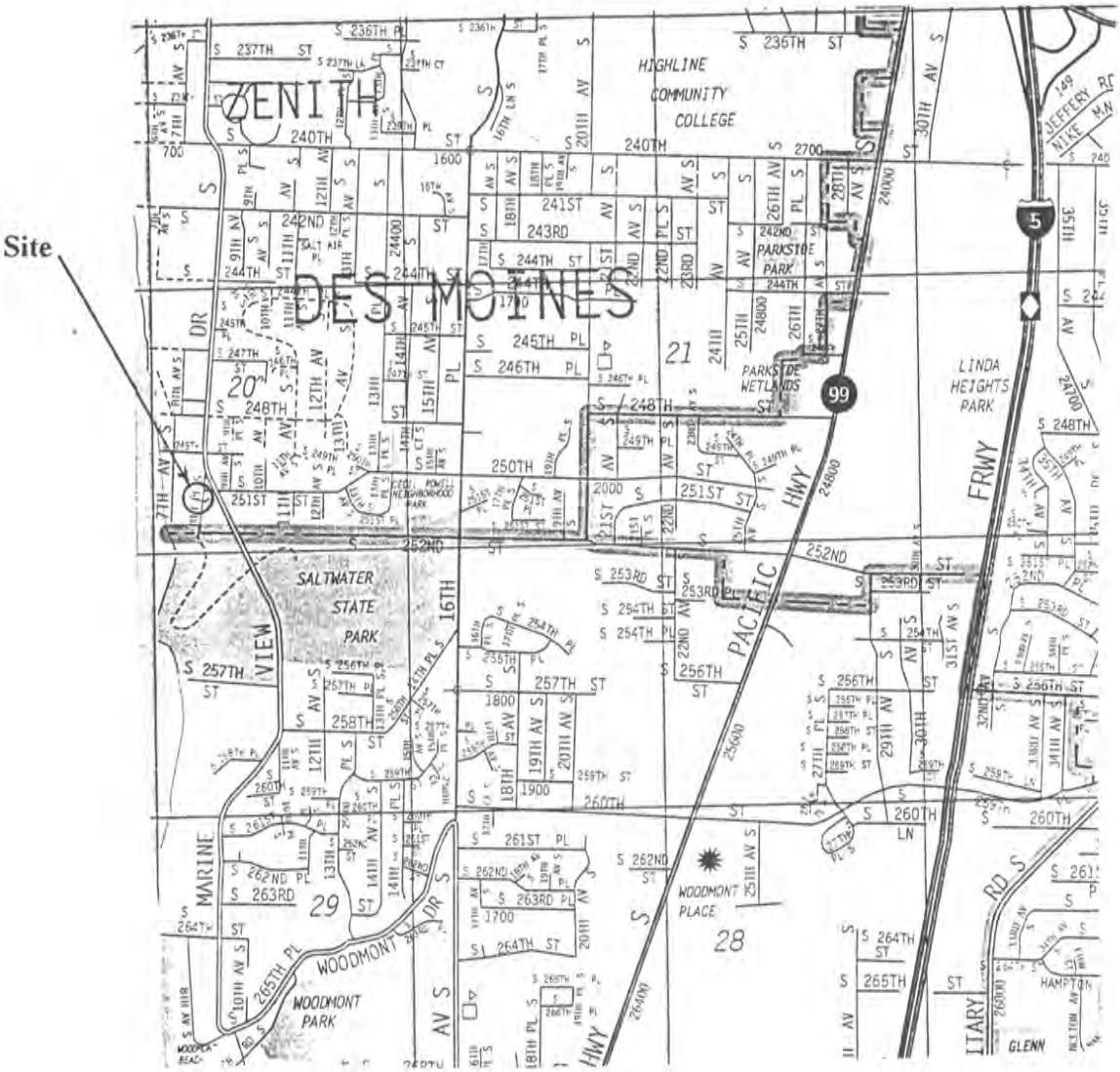

From: Thomas Bros: 1998, King County

American Engineering Corporation	Vicinity Map		
	Pienaik Residence		
4032 148th Ave. NE, Redmond, WA 98052	Project No.	Date	Figure
	#9548	10-19-98	No. 1

City of Des Moines

COMMUNITY DEVELOPMENT
805 SOUTH 219TH STREET
DES MOINES, WASHINGTON 98198-6340
(206) 878-8626 FAX: (206) 870-6544

RESUBMITTAL/REVISION COVER SHEET

☒ Resubmittal ☐ Revision

Resubmit only to the Community Development Department

DEPARTMENT TO RECEIVE THE RESUBMITTAL Bob

Date: 1/12/99 Project Number: BP98-3910

Project Information

Project Address: 25107 8TH PLACE SOUTH, DES MOINES, WA. 98195

Type of Project: SECOND STORY ADDITION
(New building, TI, Mechanical, etc.)

Applicant Information

Contact person: BRYAN REIGHTLEY - LZL CONSTRUCTION

Name: Telephone Number: 425-864-0344 (CELL)
206-978-7014 (PAGER)

Address:

Changes must be highlighted or clouded on construction drawings.

DESCRIBE RESUBMITTAL (BE SPECIFIC):

CREATE A STORAGE AREA ABOVE NEW CLOSET.
THIS WOULD BE DONE BY RAISING THE ROOF BY 2'-0"
WITH KNEE WALLS AND BUILDING THE FLOOR TO CARRY
A LOAD OF 80 LBS/ft.

FOR OFFICE USE ONLY

ROUTING:	APPROVED BY:	DATE
☒ Community Development	SA	1/14/99
☐ Engineering		
☐ Fire Department		
☒ Building	Robert May	1-14-99
☐ Other		

Plan Check Fees: ____hrs. @ $50/hr.=

Inspector Fees: ____hrs. @ $50/hr. =

p:\forms\1017

City of Des Moines

COMMUNITY DEVELOPMENT
805 SOUTH 219TH STREET
DES MOINES, WASHINGTON 98198-6340
(206) 878-8626 FAX: (206) 870-6544

October 1, 1998

LZL Construction
18912 North Creek Pkwy Suite #117
Bothell, WA 98011

RE: second story addition at 25107 8th Pl. So. (983910)

Dear, Doug
I am unable to complete the plan review of the above referenced project until I receive additional information regarding but not limited to the following:

1. Provide more detail on the HD8A Connection to the floor beam at grid #2.
2. Provide information on the soil and slope conditions. Verify soil bearing capacity and stability at the slope.
3. Provide details for the breezeway to include engineering and foundation design.

The purpose of this plan review is to verify code compliance, to the extent possible and reasonable, given the information provided on the plans and the City's plan review resources and capabilities. In no way does any City approval constitute a guarantee of code compliance; authorize any work in violation of any applicable codes; or relieve the owner of responsibility for complying with pertinent codes and ordinances.

If you are required to resubmit your plans or details, provide two sets of the corrected drawings and the original working set, and complete a resubmital form (available at the counter). Plans requiring engineering must be stamped by the engineer and be accompanied by the engineer's calculations. I will review the resubmittal as expediently as possible.

Further corrections may be necessary as a result of submitting additional information. If you have any questions, please call me at 870-6542 during regular office hours, which are from 8:00am to 12:00pm and from 1:00pm to 4:30pm, or leave a message on my voice mail.

Respectfully,

Robert L. Meyers

Plans Examiner
cc: File

MITCHELL ENGINEERING INC.

7821 - 168th Ave. N.E.
Redmond, WA 98052
(425) 747-1500

FILE COPY

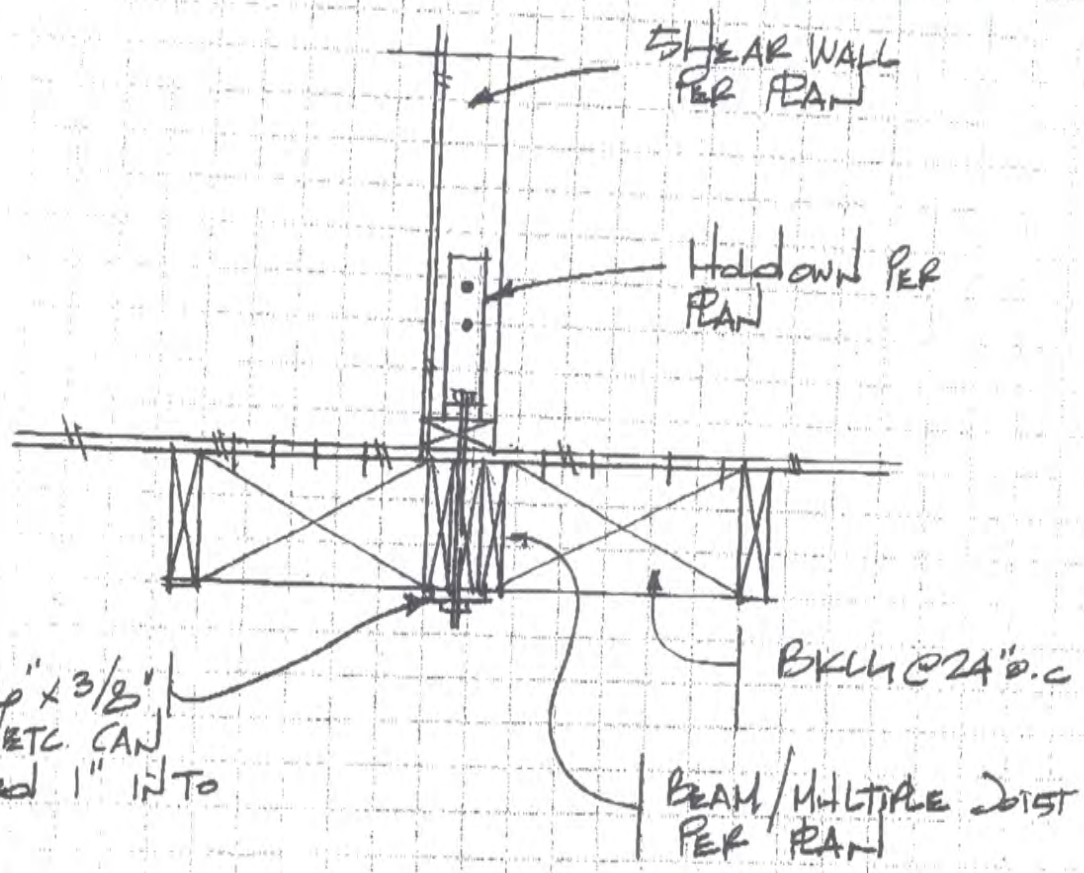

Section

SIM FOR TJI floor SYSTEM

REPARED BY _____ PROJECT _____ SHEET NO. ____ OF ____

ATE _____ SUBJECT _____ JOB NO. _____

MITCHELL ENGINEERING INC.

7821 - 168th Ave. N.E.
Redmond, WA 98052
(425) 747-1500

CHECK LOADING ON EXISTING FTG'S:

@ BACK OF GARAGE WALL

$W_{ROOF} = 12' \times 40PSF = 480\ PLF$
$W_{FLOOR} = 9' \times 50PSF = 450\ PLF$
$W_{ALLS} - 18' \times 10PSF = 180\ PLF$
} $1110^{\#}/FT$

W/ 12" WIDE FTG. ∴

SOIL PRESSURE → 1110/12" → 1110PSF ≤ 2000PSF

∴ EXISTING FTG O.K

CHECK PT. LOAD @ CO 3/4 x 18 G.L @ GARAGE

$-P = 930^{\#}/FT + 40PSF \times 3' = 1050^{\#} \times 23'/2 = 12100^{\#}$

W/ 1500PSF BRG

$L\ (12100/1500)^{1/2} = 3'\text{-}0" \times 3'\text{-}0" \times 12"\ dp$
W/ (3) #4

∴ CONCLUDE EXISTING FTG O.K NEW 2nd STORY ADDITION - ADD 3'-0" x 3'-0" x 12" dp FTG. @ PT. LOAD OF G.L. @ GARAGE.

MICHAEL MITCHELL
STATE OF WASHINGTON
20775
REGISTERED PROFESSIONAL ENGINEER
EXPIRES 4/1/00

PREPARED BY M.M. PROJECT L.Z.L. CONSTRUCTION SHEET NO. #1 OF 2
DATE 7/19/98 SUBJECT PIENIAK. JOB NO. 98897

FILE COPY

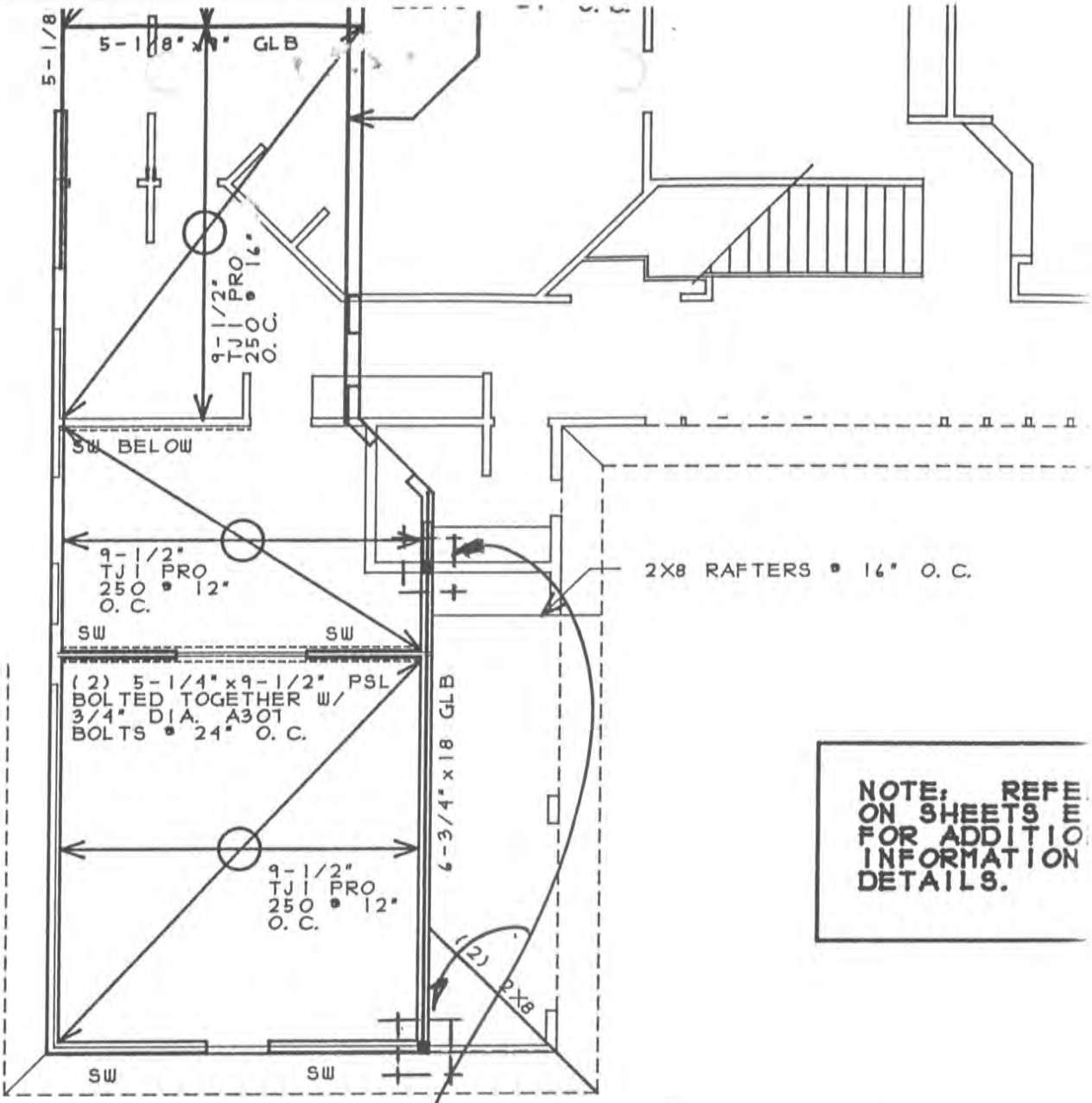

NOTE: REFE
ON SHEETS E
FOR ADDITIO
INFORMATION
DETAILS.

SECOND FLOOR FRAMING P

Add FTG. 3'-0" x 3'-0" x 12" Below Exist FTG. @ New Column Pt. Load.

2/2

ELECTRICAL PERMIT

Community Development Department
Building Division
805 S. 219th St.
Des Moines, WA 98198
(206)878-8626 FAX: (206)870-6544

Date of Issuance: 1/25/99 Permit Number: E983910

Receipt No.: 12545 Permit Type: SFR

PROJECT INFORMATION

Project Address: 25107 84th PL S

Owner Name: Heinz Pieniak

Address: same

Type of Construction: VN Occupancy Group: R-3

CONTRACTOR INFORMATION

Contractor Business Name: Consumer Electric

Contractor Business Address: 410 S 96th Suite #5 Seatac WA 98108

Contractor License Number: CONSUEI024NS Contractor Phone: 206-763-8310

Notice to contractor: Call 878-8626 to schedule an inspection at least 24 hours in advance of your requested inspection date. Inspections are scheduled on a first called basis.

☐ Furnace	☐ Temporaty Service Pole
☐ Disposal	☐ Service Equipment to 200 amps
☐ Vent Fan	☐ Service Equipment 201 to 800 amps
☐ Oven	☐ Service Equipment over 800 amps
☐ Cooking Unit	☐ Electric Motors
☐ Range	☐ Pumps up to 1 hp
☐ Dishwasher	☐ Pumps from 1 to 5 hp
☐ Water Heater	☐ Pumps from 6 to 20 hp
☐ Washer	☐ Distribution Panel
☐ Dryer	☐ Electric Sign
☐ Garage Door Opener	☐ Other:
☐ Other Appliance:	
☐ Fixtures	
☐ Outlets	
☐ Switches	
☐ Receptacles	

OK to Cover Floor SW Corner 1-28-99 [illegible]

ELECTRICAL INSPECTION RECORD	APPROVED NO	APPROVED YES	DATE	BY
☐ Low Voltage System				
☐ Rough Electrical OK to Cover All		✓	4/14/99	[illegible]
☐ Limited Service (Okay to energize)				
☐ Final Electrical	5/21/99	✓	6/2/99	[illegible]

THIS CARD IS REQUIRED TO BE ON SITE.

OK TO COVER WALLS AND CEILING UPSTAIRS ADDITION 3/23/99 [illegible]

p:\forms\1090
2/7/95

CITY OF DES MOINES
COMMUNITY DEVELOPMENT DEPARTMENT

ELECTRICAL PERMIT APPLICATION

ELEC
ELECTRICAL PERMIT APPLICATION

Application Date: JAN 25 1999 Permit No.: E98 3910

PROJECT INFORMATION

Project Address: 25107 8th PLACE SOUTH Associated Building Permit No.: 983910

Property Owner: HEINZ PIENIAK Owner's Phone Number: _____

Contractor: CONSUMER ELECTRIC WA State Contractor's License No.: CONSUCI 024NS

Contractor's Address: 410 S. 96th SUITE #5 Phone Number: 206 763 8310

City: SEATTLE **State:** WA **Zip:** 98108 **Contact Person:** RANDY PENROD

Type of Electrical Work

☐ New Single-Family Residential ☐ Additions with new wiring ☒ Remodels with new wiring ☐ Commercial work ☐ Other minor work

Complete each item applicable to project

Single Family

☐ New building Amps: _____
☒ Addition Amps: 5-20kw
☒ Remodel Amps: —
☐ Alteration Amps: _____
☐ Noise Remedy Amps: _____

Commercial

☐ New building Amps: _____
☐ Addition Amps: _____
☐ Remodel Amps: _____
☐ Multi-family Amps: _____

☐ Pool/Hot Tub/Sauna

Illuminated Sign
Sign is: ☐ New ☐ Existing
Have you applied for a sign permit?
☐ Yes ☐ No

☐ Limited/low voltage
☐ Service Change
Number of Circuits: _____
☐ Temporary power

FEE SCHEDULE

DESCRIPTION		UNITS	FEE
Appliances	$ 8.00 for up to 2 appliances $ 3.50 each additional appliance over 2		
Low Voltage Systems	$ 8.00		
Temporary Service	$15.00		
Fixtures, Outlets, Switches or Receptacles	$8.00 fee for up to 10 $1.00 fee for each additional over 10 $ .50 fee for each additional over 100	30	28.00
Service Equipment: To 200 amps 201 to 800 amps Over 800 amps	 $28.00 $45.00 $55.00		
Electric Motors and Pumps: 0 to 1hp 1 to 5hp 6 to 20hp Over 20 to 50hp	 $ 4.50 $ 8.00 $10.00 $18.00	2	9.00
Distribution Panel	$20.00		
Electric Sign	$25.00		
Commercial Outdoor Lighting Fixture or Parking Lot Standard	$ 6.50		
(1840) Automation Fee	**$ 4.00 Residential/$10.00 Commercial**		**$4.00 / $10.00**
Inspections for Other Equipment not Listed	$47.50		
Electrical Permit Fee	**$43.00**		**$43.00**
Plan Review (required for all new construction)	20% of total permit fee		
Receipt Number: 12545	***Date:*** 1/25/99	**Total Fees**	$44.00

NOTICE

I understand that as property owner, or contractor/agent of the property owner, all work performed under this permit requires an inspection. I also understand that I must request an inspection no later than 24 hours in advance for all work performed under this permit.

Property Owner or Contractor/AgentSignature: [signature] **Date:** JAN 25 99

u:\master forms\permits\1227-electrical permit.doc
10/02/98

CITY OF DES MOINES
COMMUNITY DEVELOPMENT DEPARTMENT

BUILDING PERMIT APPLICATION

BLDG
BUILDING PERMIT APPLICATION

Application Date 7-30-98 Issue Date 12/15/98 Permit No. 983910

Permit Types

- [x] Building Permit
- [ ] Noise Remedy
- [ ] Right of Way Permit
- [ ] Demolition Permit
- [ ] Fire
- [x] Residential
- [ ] Commercial
- [ ] Multi-Family
- [ ] New
- [x] Addition
- [ ] Repair
- [ ] Alteration

PROJECT INFORMATION

Project Address: 25107 8TH PL. S.
DES MOINES, WA 98198

Contact Person: MATT PETERS
(425) 485 3877

Property Owner: HEINZ PIENIAK

Owner's Phone Number: 206 824-7534

Contractor: LZL CONSTRUCTION, INC.

UBI No.: 601-350-498

Contractor's Address: 18912 NORTH CREEK PKW #117
BOTHELL, WA 98011

Contractor's Phone Number: 425 485-3877

WA State Contractor's License No.: #LZLCO1*085BA

Exp. Date: 4-1-99

SITE INFORMATION

King County Tax Assessor's Number: 256080-6076

Des Moines Zoning:

Square footage of lot: 56,000 Square footage of impervious surface: Existing 7392 New 0

Lot coverage: 13.2 %

Setbacks

Front yard: 89' Rear yard: Side yard A: 15' Side yard B: 10'6"

STRUCTURAL INFORMATION

Building Area

Basement: N/A sq. ft. First story: 2122 sq. ft. Second story: 2224 sq. ft.

Garage: 653 sq. ft. Decks: 885 sq. ft. Miscellaneous: sq. ft.

Total new area: 985 *sq. ft.*

Building use: SF Occupancy group: R III Number of units: 1

Number of stories: 2 Type of construction: V
CONVENTIONAL LIGHT-FRAME

No. of bedrooms: 3

BRIEF DESCRIPTION OF WORK BEING PERFORMED UNDER THIS PERMIT

CONSTRUCT A SECOND-STORY ADDITION TO AN EXISTING SINGLE-FAMILY RESIDENCE. REMODEL PROVIDES NEW RECREATION ROOM OFF EXISTING BEDROOM, AND A GENERAL-USE STORAGE CLOSET (EXERCISE EQUIPMENT, FILES, VACUUM EQUIPMENT ETC)

OWNER'S VALUATION (Labor and materials must be included) $ 110,000.00

BUILDING PERMIT

Community Development Department
Building Division
805 S. 219th St.
Des Moines, WA 98198
(206)878-8626 FAX: (206)870-6544

Applicable Code: Current edition of Uniform Building Code as adopted and amended by City Ordinance.

Date of Issuance: 12/15/98 Permit Number: 983910

Receipt No.: 12411

PROJECT INFORMATION

Project Address: 25107 84th Pl S

Owner Name: HEINZ PIENIAK

Address: same

Type of Construction: VN Occupancy Group: R-3

CONTRACTOR INFORMATION

Contractor Business Name: LZL CONST INC

Contractor Business Address: 18912 N Creek

Contractor License Number: LZLCOI*OBSKA Contractor Phone: 425-485-3877

LENDER/BOND ISSUER

Lender Name: Phone:

Address:

Notice to contractor: Call 878-8626 to schedule an inspection at least 24 hours in advance of your requested inspection date. Inspections are scheduled on a first called basis.

INSPECTION RECORD	APPROVED NO	APPROVED YES	DATE	BY
Footings 4 Post Footings		✓	2/9/99	[illegible]
Foundation Walls (Steel, Forms, Hold Downs)				
Footing Drains (Before Backfill)				
Underfloor Above Existing 1st Floor OK to Cover 2/9/99 [illegible]				
Floor Slab				
Roof Nailing (Sheathing) EAST HALF OK DB 1-26-99 UPPER SOUTHWEST [illegible]		✓	3-9-99	DB
Shearwall Nailing/Hold Downs EAST HALF ADDITION OK 1-28-99 DB UPPER [illegible]		✓	4-14-99	DB
Framing (All Rough-ins Approved)		✓	4-14-99	DB
Insulation		✓	4-14-99	DB
Gypsum Wallboard (Sheetrock Nailing)		✓	4/23/99	[illegible]
Final: Engineering Inspection Requirements				
Drainage Yes ☒ No ☐				
Special Requirements Yes ☒ No ☐				
Final: Development Services Requirements				
Parking Yes ☐ No ☒				
Landscaping Yes ☒ No ☐				
Special Requirements Yes ☐ No ☒				
Final: Fire District Yes ☐ No ☒				
Final: Building Requirements				
Final Inspection Yes ☒ No ☐	5/29/99 ✓	✓	6/2/99	[illegible]
Certificate of Occupancy Yes ☐ No ☒				

THIS CARD IS REQUIRED TO BE ON SITE.

p:\forms\1082
2/7/95

Wayne Schriel Home Copy on Site

MECHANICAL OR PLUMBING PERMIT

Community Development Department
Building Division
805 S. 219th St.
Des Moines, WA 98198
(206)878-8626 FAX: (206)870-6544

Applicable Code: Current edition of mechanical , plumbing or electrical code adopted and amended by City Ordinance.

Date of Issuance: 2/11/99 Permit Number: M 983526

Receipt No.: 12653 Permit Type: SFR

PROJECT INFORMATION

Project Address: 25107 8th Pl S

Owner Name: Heinz Pieniak

Address: Same

Type of Construction: VN Occupancy Group: R-3

CONTRACTOR INFORMATION

Contractor Business Name: ~~[illegible]~~ NORDIC HEATING INC

Contractor Business Address: 18912 N Creek PKWY SUITE 117 Bothell

Contractor License Number: NORDIHI099BJ Contractor Phone: 1-425-485-3877

Notice to contractor: Call 878-8626 to schedule an inspection at least 24 hours in advance of your requested inspection date. Inspections are scheduled on a first called basis.

MECHANICAL INSPECTION RECORD	APPROVED NO	APPROVED YES	DATE	BY
Rough Mechanical				
Gas Piping				
Final Mechanical				

PLUMBING INSPECTION RECORD	APPROVED NO	APPROVED YES	DATE	BY
Ground Plumbing				
Waste and Vent Piping				
Gas Piping				
Final Plumbing				

THIS CARD IS REQUIRED TO BE ON SITE.

p:\forms\1089
2/7/95

CITY OF DES MOINES
COMMUNITY DEVELOPMENT

MECHANICAL OR PLUMBING PERMIT APPLICATION

M/P

MECHANICAL OR PLUMBING PERMIT APPLICATION

Application Date: 2/18/99 Permit No.: M983526

PROJECT INFORMATION

Project Address: 25107 8 PL SO Associated Building Permit No.: 983526

Property Owner: Heinz Pieniak Des Moines Owner's Phone Number: 1425-485 3877

Contractor: EZ NORDIC HTG WA State Contractor's License No.: NORDIHI099BJ

Contractor's Address: 18912 No Creek Pkwy Ste 117 City: Bothell St: WA Zip: 98011

Contact Name: _____ **Phone Number:** _____

Permit Type: ☑ Residential ☐ Non-Residential ☐ Plumbing ☑ Mechanical ☐ Gas Piping ☑ Retrofit ☐ New ☐ Remodel ☐ Addition

FEE SCHEDULE

PLUMBING				MECHANICAL			
Description of project:				Description of project:			
FIXTURES	FEE PER UNIT	UNITS	FEE	FIXTURES	FEE PER UNIT	UNITS	FEE
Toilets	$7.00			Furnaces to 100,000 BTU	$13.25	1	13.25
Bath Tubs	$7.00			Furnaces > 100,000 BTU	$16.25		
Showers	$7.00			Unit Heaters	$13.25		
Basins	$7.00			Appliance Vents	$ 6.50		
Sinks	$7.00			Air Conditioning Units	$16.15		
Floor Drains	$7.00			Mechanical Hoods	$ 9.50		
Hot Water Heaters	$7.00			Fireplace Inserts	$ 9.50		
Dishwashers	$7.00			Free Standing Stoves	$ 9.50		
Laundry Trays	$7.00			Heat Pumps	$16.15		
Laundry Washers	$7.00			Ranges	$ 9.50		
Whirlpools, Spas, etc.	$7.00			Gas Piping (Chapter 22)	1 – 4 $5.50 5+ $1.00 each	1	5.50
Gas Piping (Chapter 22)	1 – 4 $5.50 5+ $1.00 each						
Other:				Other:			
		Fixture Fee Totals				Fixture Fee Totals	
		Automation Fee	**$4.00**			**Automation Fee**	**$4.00**
		Plumbing Permit Fee	**$43.00**			**Mechanical Permit Fee**	**$43.00**
		Plan Review Fee				Plan Review Fee	
		Total Plumbing Permit				Total Mechanical Permit	65.75

NOTICE

I understand that as property owner, or contractor/agent of the property owner, all work performed under this permit requires an inspection. I also understand that I must request an inspection no later than 24 hours in advance for all work performed under this permit.

Property Owner or Contractor/AgentSignature: J Knapton Date: 2 18 99

For Office Use *Receipt number:* 12653 *Date:* 2/18/99

7-30-98 PIENIAK BP98-3910

PLAN REVIEW ROUTING

	Initial/Approved			Notified of Decision		
	Yes	No	Date	Yes	No	Date
PLANNING: ☐ Zoning _____ ☐ SEPA _____ ☐ Shoreline _____ ☐ Height _____ ☐ Setbacks _____ ☐ Bonding Amount $_____	OK JB 8-4-98					
TRANSPORTATION: ☐ Streets ☐ Lid Required ☐ Curbs ☐ Gutters ☐ Sidewalks ☐ Other ☐ Bonding Amount $_____						
SURFACE WATER MANAGEMENT: ☐ >500 S.F. ☐ >5,000 S.F. ☐ Right of Way Drainage Required ☐ Technical Information Report ☐ Storm Hookup Fee $_____ ☐ Bonding Amount $_____						
FIRE:						
RIGHT OF WAY:						
BUILDING: Approved to construct 985 SF 2nd floor addition as per approved Plans and Engineering Michael Mitchell License# 20775	RM		12-15-98			

Project Name HEINZ PIENIAK

Site Address 25107 84th Pl S

Permit Number 983910

Date Filed 7-30-98

☐ **Commercial** ☒ **Residential**

Contact Person MATT PETERS

Contant ~~Person~~ Phone 425-485-7534

BUILDING PERMIT

Community Development Department
Building Division
805 S. 219th St
Des Moines, WA 98198
(206)878-8626 FAX: (206)870-6544

Applicable Code: Current edition of Uniform Building Code as adopted and amended by City Ordinance.

Date of Issuance: _____ Permit Number: _____

Receipt No.: _____

PROJECT INFORMATION

Project Address: _____

Owner Name: _____

Address: _____

Type of Construction: IIN Occupancy Group: R-3

CONTRACTOR INFORMATION

Contractor Business Name: _____

Contractor Business Address: _____

Contractor License Number: _____ Contractor Phone: _____

LENDER/BOND ISSUER

Lender Name: _____ Phone: _____

Address: _____

Notice to contractor: Call 878-8626 to schedule an inspection at least 24 hours in advance of your requested inspection date. Inspections are scheduled on a first called basis.

INSPECTION RECORD		APPROVED NO	APPROVED YES	DATE	BY
Footings					
Foundation Walls (Steel, Forms, Hold Downs)					
Footing Drains (Before Backfill)					
Underfloor					
Floor Slab					
Roof Nailing (Sheathing)					
Shearwall Nailing/Hold Downs					
Framing (All Rough-ins Approved)					
Insulation					
Gypsum Wallboard (Sheetrock Nailing)					
Final: Engineering Inspection Requirements					
Drainage	Yes ☒ No ☐				
Special Requirements	Yes ☒ No ☐				
Final: Development Services Requirements					
Parking	Yes ☐ No ☒				
Landscaping	Yes ☒ No ☒				
Special Requirements	Yes ☐ No ☒				
Final: Fire District	Yes ☐ No ☒				
Final: Building Requirements					
Final Inspection	Yes ☒ No ☐				
Certificate of Occupancy	Yes ☐ No ☒				

City of Des Moines

COMMUNITY DEVELOPMENT
805 SOUTH 219TH STREET
DES MOINES, WASHINGTON 98198-6340
(206) 878-8626 FAX: (206) 870-6544

RESUBMITTAL/REVISION COVER SHEET

☒ Resubmittal ☐ Revision

Resubmit only to the Community Development Department

DEPARTMENT TO RECEIVE THE RESUBMITTAL _____

Date: Feb 1 1999 Project Number: 983910

Project Information

Project Address: 25107 8th Pl South

Type of Project: Remodel Second Floor Addition
(New building, TI, Mechanical, etc.)

Applicant Information

Contact person: STEVE BRINK

Name: Pieniak Residence Telephone Number: 206 978-7024

Address: _____

Changes must be highlighted or clouded on construction drawings.

DESCRIBE RESUBMITTAL (BE SPECIFIC):

Revised Upper Floor Framing above Kitchen

FOR OFFICE USE ONLY

ROUTING:	APPROVED BY:	DATE
☐ Community Development		
☐ Engineering		
☐ Fire Department		
☒ Building	Robert S May	2-3-99
☐ Other _____		

Plan Check Fees: ____hrs. @ $50/hr.= _____

Inspector Fees: ____hrs. @ $50/hr. = _____

p:\forms\1017

The Waterland City
Printed on Recycled Paper

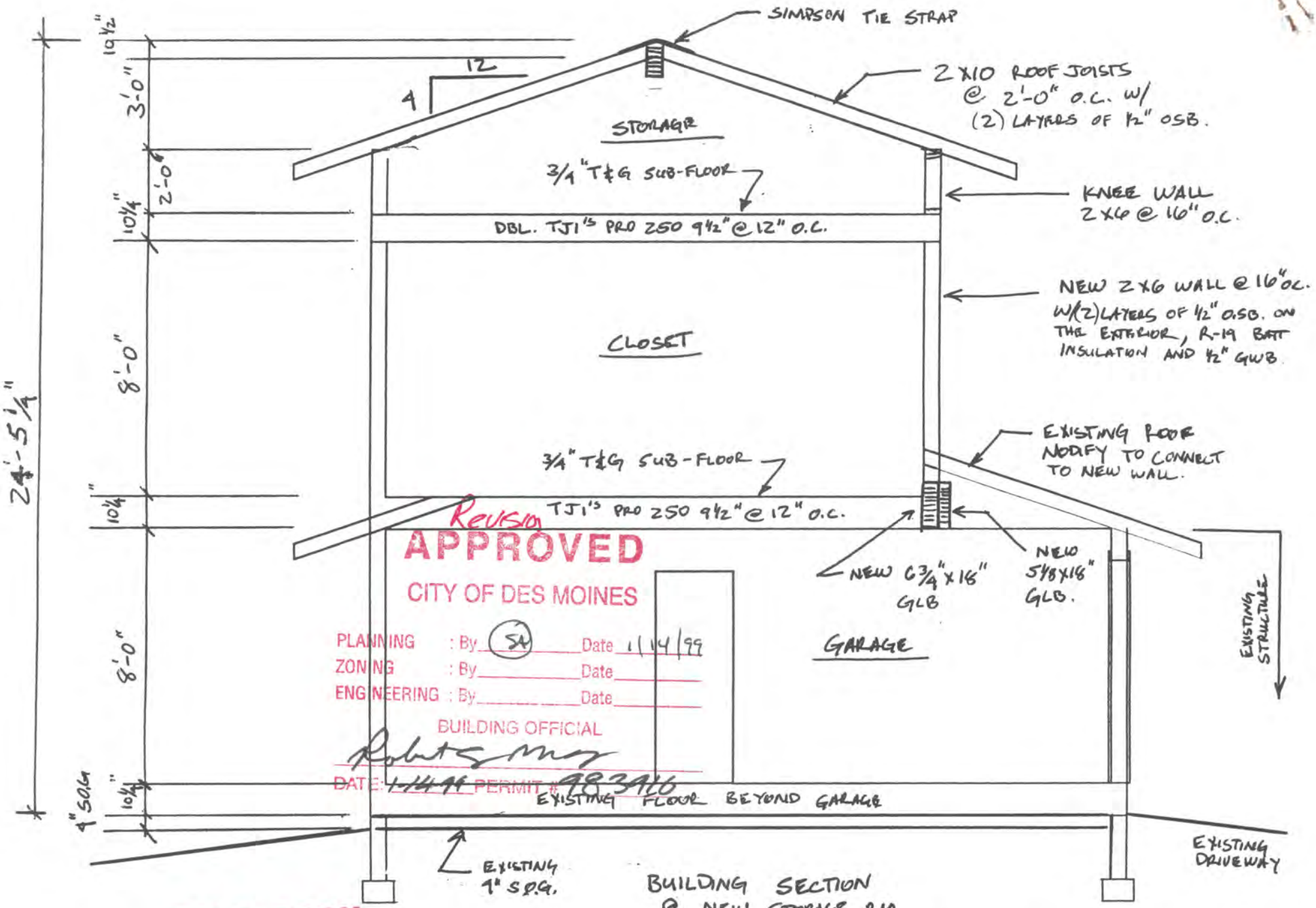

Revision

APPROVED
CITY OF DES MOINES

PLANNING : By SA Date 1/14/99
ZONING : By _____ Date _____
ENGINEERING : By _____ Date _____

BUILDING OFFICIAL
Robert May
DATE: 1-14-99 PERMIT # 983416

FILE COPY

BUILDING SECTION @ NEW STORAGE RM

1/4" = 1'-0"

PIENIAK 2ND FLOOR ADDITION

BRYAN REIGHTLEY
1/12/99

LZL

GEO Group Northwest, Inc.
Geotechnical Engineers, Geologists & Environmental Scientists

FILE COPY

February 15, 1995

G-0477

Mr. Mike Swinnerton
State Farm Insurance Companies
6835 Southcenter Boulevard
Tukwila, WA 98188

Subject: Landslide Evaluation
Heinz and Gloria Pieniak Residence
25107 8th Place South
Des Moines, Washington 98198

Dear Mike:

At your request, Mr. William Chang from Geo Group Northwest, Inc. visited the Pieniak Residence on February 5, 1995. The purpose of the site visit was to perform a geotechnical evaluation to determine the cause of the landslide in the backyard of the Pieniak residence.

SCOPE OF SERVICES

Our scope of services for this project consisted of a site visit to make a visual evaluation of the landslide, interview Heinz and Gloria Pieniak and provide conclusions regarding the cause of the landslide.

FINDINGS

Site Conditions at the Pieniak Residence

The Pieniak residence is located at 25107 8th Place South in Des Moines, Washington, at the north side of Saltwater State Park as shown on Plate 1 - Geologic Map. The house is a two story structure located on a relatively level area at the top of a slope overlooking Puget Sound. At the west side of the house is a relatively level backyard lawn area approximately 25 feet in width (Photos 1 & 2). Beyond the level lawn area, is a steep slope which drops off at an estimated angle of 40 to 50 degrees to the horizontal (Photos 7 & 8).

13240 NE 20th Street, Suite 12 • Bellevue, Washington 98005
Phone 206/649-8757 • FAX 206/649-8758

The Landslide

We were informed by the homeowners that the slide took place about December 27, 1994 following heavy rains. At the time of our site visit, we observed that the steep slope below the backyard had experienced a slide, the scarp is located immediately below the railroad ties marking the edge of the landscaped lawn area (Photos 3, 4, 5 & 6).

During our site visit on February 5, 1995 we noted that the exposed slope scarp (Photos 2 & 3) consisted of loose soils, and we visually classified them as silty SAND with gravel.

Geologic and Soil Conditions

According to the geologic map for the area published by the U.S. Geological Survey, and shown on Plate 1 - Geologic Map. the site house is located in an area underlain by Glacial Till (Qgt), consisting of a very dense mixture of sand silt and gravel. The steep slope below the house is underlain by the Salmon Springs deposit (Qss), consisting of sand and pebbles, with local lenses of till, silt and clay.

Based on our observations of the slide scarp, it is our opinion that the builder of the house had pushed off some loose fills down the slope to maximize the size of a level backyard.

Chronology of Events

Based on our interviews with Heinz and Gloria Pieniak, we have assembled the following chronology of events.

1978 - Home was built.

1989 - Mr. and Mrs. Pieniak purchased home.

1994 - December 27, 1994 the slope below the backyard at the Pieniak residence suffered a landslide.

We understand that the vegetation on the slope was trimmed down every couple of years by Mr. Pieniak.

CONCLUSIONS AND RECOMMENDATIONS

Cause of the Landslide

Based on our observations, experience and conversation with the Heinz and Gloria Pieniak, it is our professional opinion that the landslide on the slope below the backyard of the Pieniak residence was due to:

1. **The existence of loose fill on the slope.**

2. **The fill was saturated by rain due to poor surface drainage control at the edge of the lawn.**

3. **The removal of vegetation possibly did not benefit the already marginal stability of the fill.**

Recommendations

At the present time we recommend that the following measures be undertaken to stabilize the slope and protect the existing yard:

1. Provide better control of surface water runoff from the backyard to the slope, such as the use of perforated pipes at the edge of impervious surfaces to capture water runoff, and tightline it for proper disposal.

2. Retain a geotechnical/structural engineer to design a wall to retain the backyard at the location of the slide. Design should consider use of Chance ground anchors.

3. Protect the exposed slopes with vegetation such as ivy. The use of jute nets or other similar products may be considered to promote vegetation growth on the slopes.

We do not recommend the addition of fill to the slope, as this will increase the driving forces, and may cause more slides on the slope.

We appreciate the opportunity to work for you on this project, if you have any questions regarding our report please call us.

Respectfully submitted,
GEO GROUP NORTHWEST, INC.

William Chang

William Chang, P.E.
Principal

WILLIAM CHANG
STATE OF WASHINGTON
28114
REGISTERED
PROFESSIONAL ENGINEER
EXPIRES 2/19/96

Attachments: Plate 1 - Geologic Map
Photo 1 through Photo 8

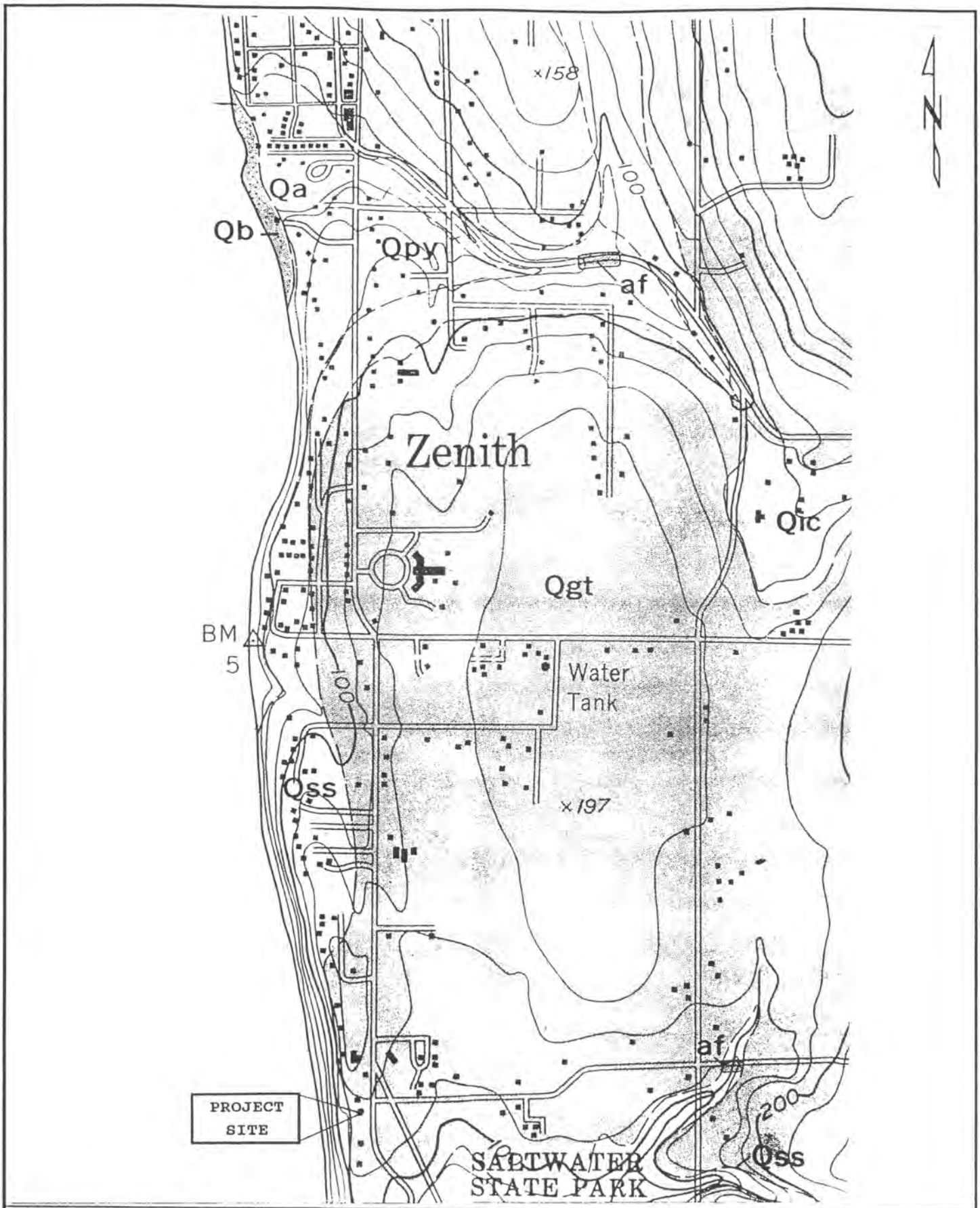

GEO Group Northwest, Inc.
Geotechnical Engineers, Geologists, & Environmental Scientists

Geologic Map

Heinz Pieniak Residence
25107 8th Place South
Des Moines, Washington

SCALE	DATE	MADE	CHKD	JOB NO.	PLATE
1" = 1000'	2/6/95	WC	WC	G-0480	1

PHOTO 1 - VIEW OF THE BACKYARD, FACING NORTH

PHOTO 2 - VIEW OF THE BACKYARD, FACING SOUTH.

PHOTO 3 - VIEW OF THE SLIDE, FACING NORTH.

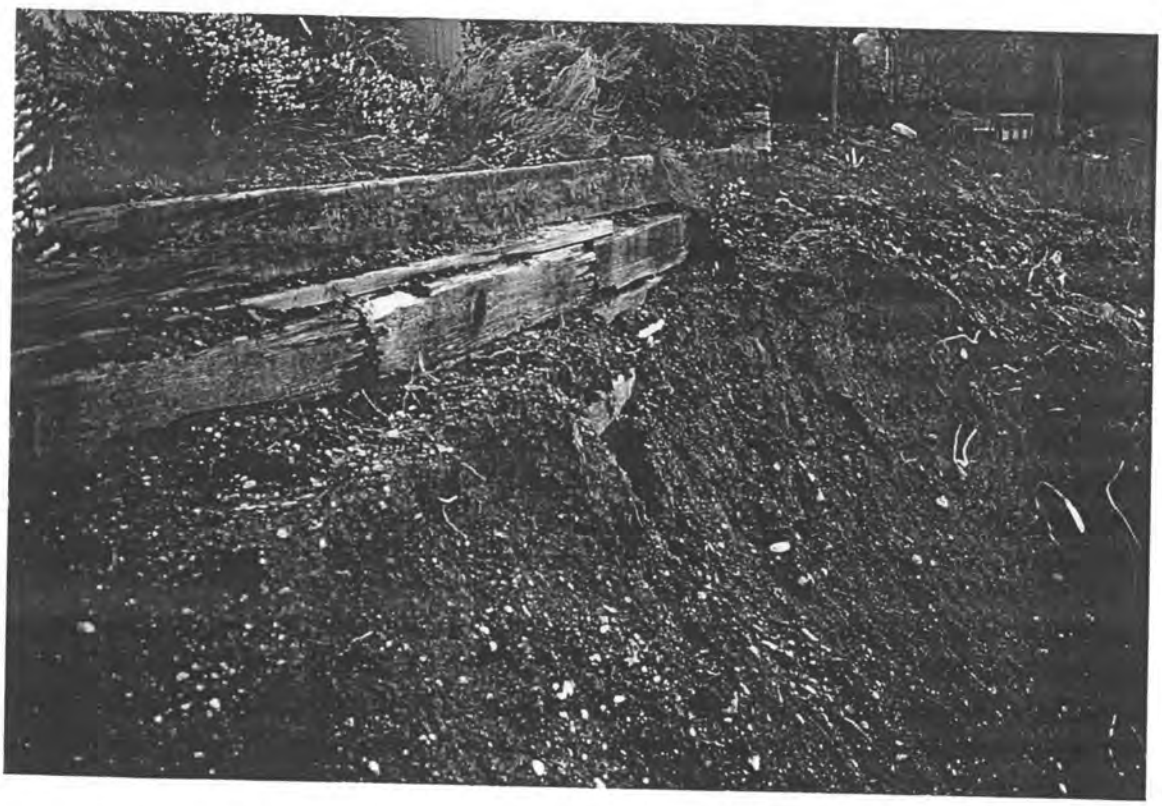

PHOTO 4 - VIEW OF THE SLIDE, FACING SOUTH.

PHOTO 5 - VIEW OF THE SLIDE, FACING NORTH.

PHOTO 6 - VIEW OF THE SLIDE, FACING WEST.

PHOTO 7 - VIEW OF THE SLIDE AND SLOPE, FACING NORTH.

PHOTO 8 - VIEW OF THE SLIDE AND SLOPE, FACING SOUTH.

LANDSLIDE EVALUATION
HEINZ AND GLORIA PIENIAK RESIDENCE
25107 8TH PLACE SOUTH
DES MOINES, WASHINGTON

G-0480

FEBRUARY 15, 1995

FOR

MR. MIKE SWINNERTON
CLAIM REPRESENTATIVE
STATE FARM INSURANCE

REC'D
S. SEATTLE
FEB 16 1995
FIRE CLAIMS

BY

GEO GROUP NORTHWEST, INC.
13240 NE 20TH STREET, SUITE 12
BELLEVUE, WASHINGTON 98005
PHONE (206) 649-8757

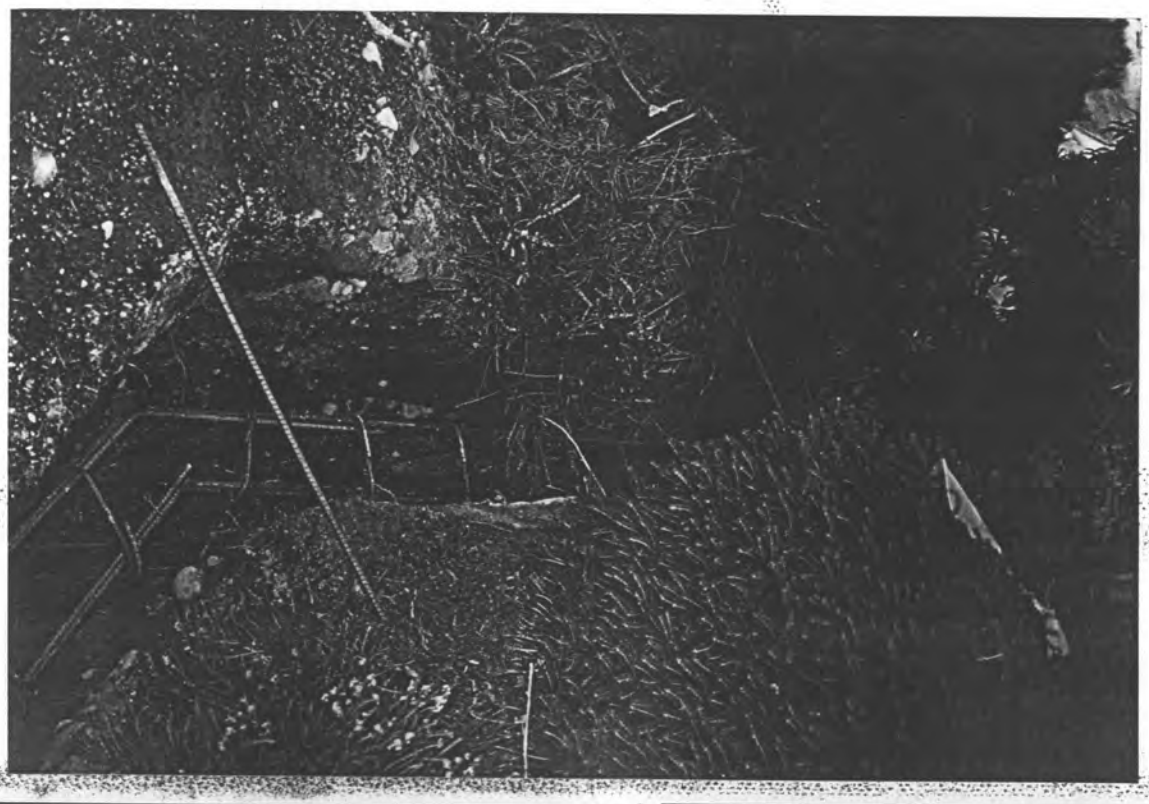

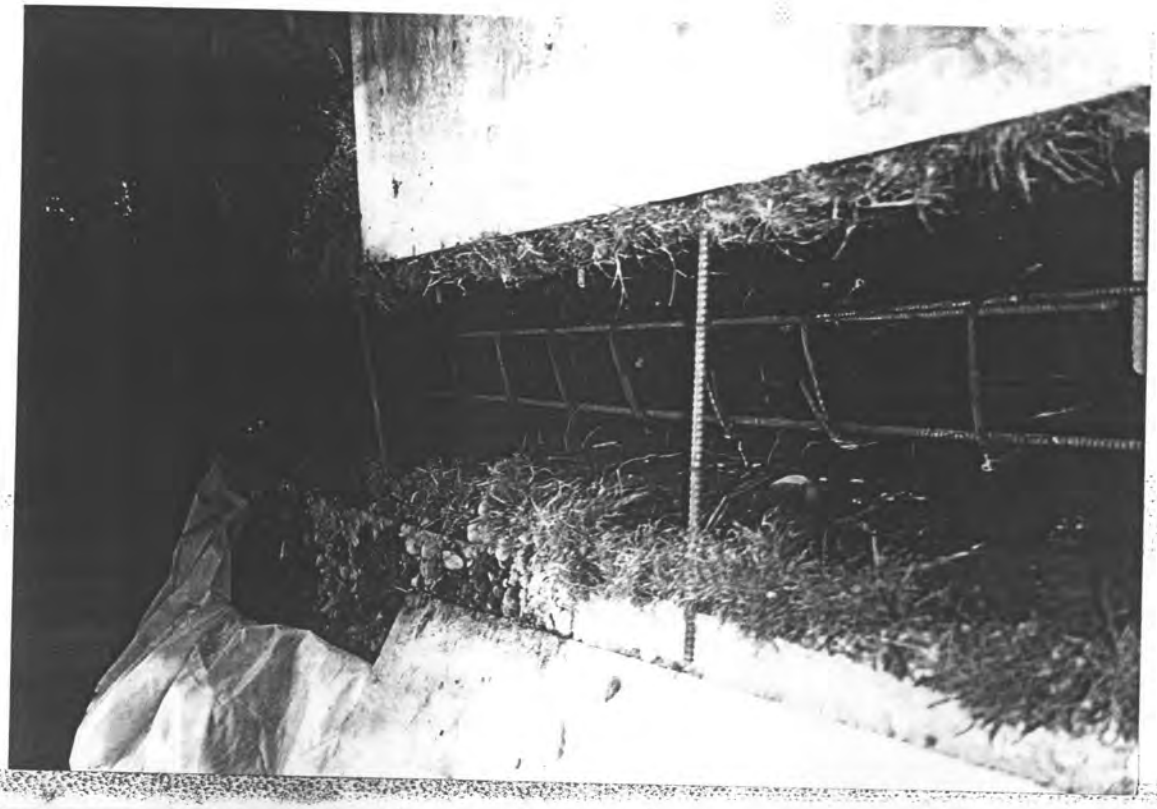

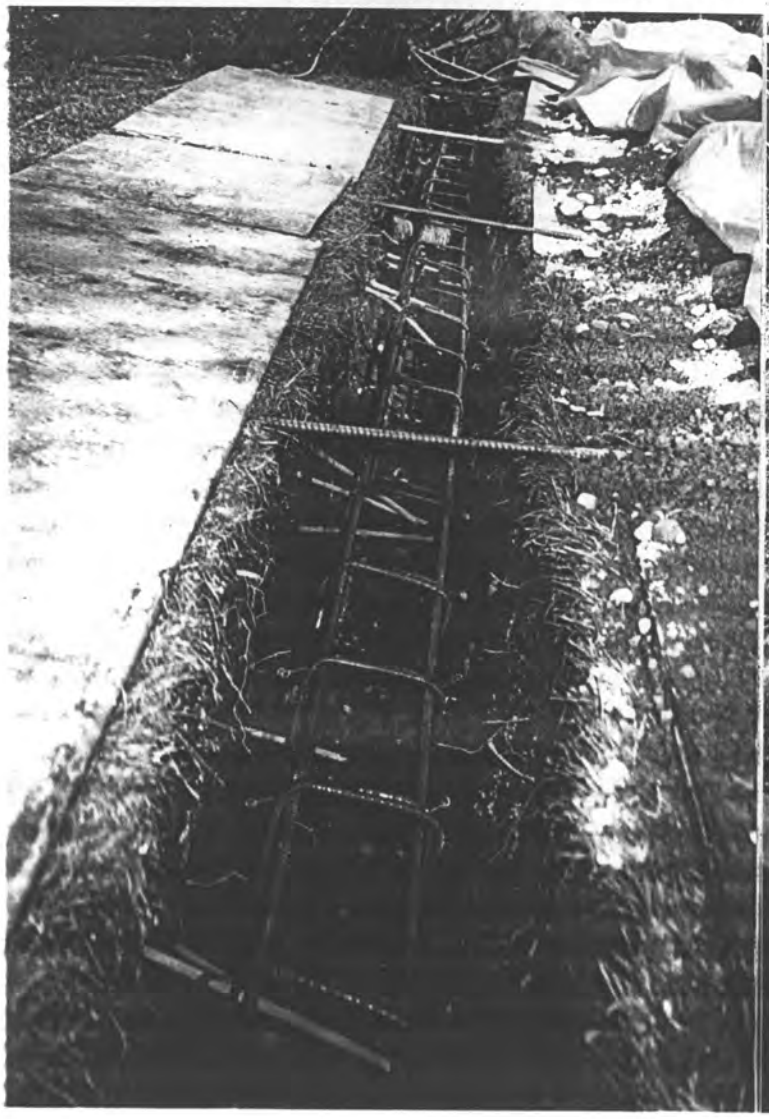

MITCHELL ENGINEERING INC.

7821 - 168th Ave. N.E.
Redmond, WA 98052
(425) 747-1500

REVISE UPPER FLOOR FRAMING ABOVE KITCHEN - REFER TO SHT. #2 FOR PLAN

→ FLOOR JOIST - LH = 12'-6" W/ 2x8 H.F. #2
$F_b = 850 \times 1.15 \times 1.1 = 1070$ PSI
$F_v = 75$ PSI
$E = 1.3 \times 10^6$ PSI

M = $50 \times 12.5^2/8 = 976.42 / 1070 = 10.9$ = ≤ 15.41
V = $50 \times 6' \times 1.5$ 450 / 75 = 6 IN²
Δ @ L/360 = 0.41
I = $5 \times 50 \times 12.5^4 \times 1728 / 384 \times 1.3 \times 10^6 \times$ = 52 IN⁴ ≤ 47

→ 52 x 16/12 = 69

(2) 2x8 HF #2 @ 16" o.c

BEAM #1 (LH = 20')

BP98 3910

→ BEAM #1 EXISTING G.L. 5 1/8 x 10 1/2

Roof Load → 4200#

M = 4200 + 800 - 5000# x 20'/4 = 25,000 x 12 / 2400 x 1.15 = 108 ≤

Revision
APPROVED
CITY OF DES MOINES

FILE COPY

∴ (E) 5 1/8 x 10 1/2 G.L. - O.K

PLANNING : By ____ Date ____
ZONING : By ____ Date ____
ENGINEERING : By ____ Date ____
BUILDING OFFICIAL
Robert G. Mayer
DATE: 2-3-99 PERMIT # 98-3910

MICHAEL MITCHELL
STATE OF WASHINGTON
20775
REGISTERED
PROFESSIONAL ENGINEER
EXPIRES 4/1/00

PREPARED BY M.M PROJECT L.Z.L. CONEST - SHEET NO. #1 OF ____
DATE 1/13/99 SUBJECT PIERIAK JOB NO. 98897

REFER TO PREVIOUS DESIGN FOR OTHER BEAMS ETC.
NOT AFFECTED BY CHANGE IN 2nd FLOOR DIRECTION

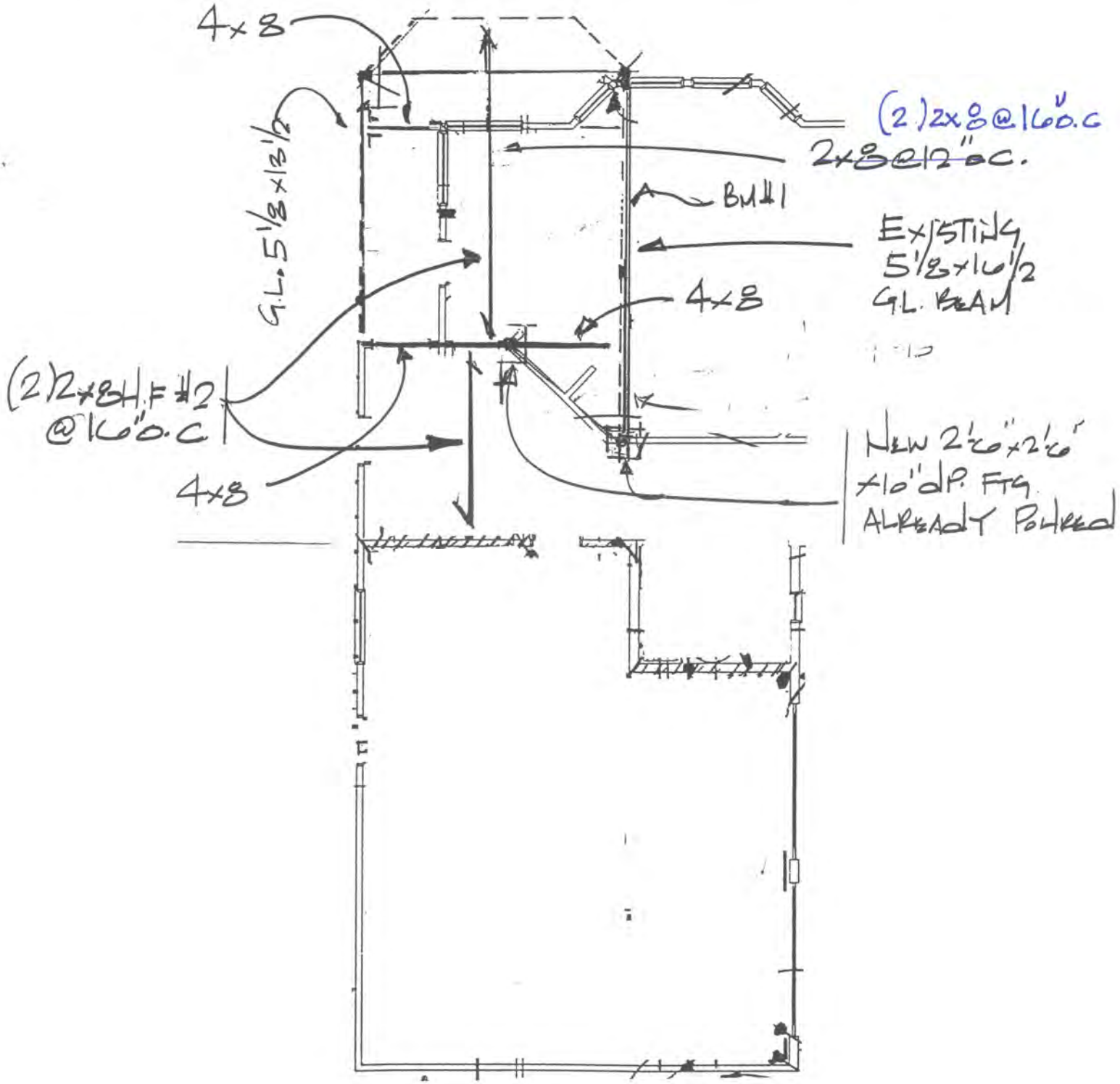

MITCHELL ENGINEERING INC.

7821 - 168th Ave. N.E.
Redmond, WA 98052
(425) 747-1500

SCOPE OF WORK:

STORAGE AREA DESIGN. - REFER TO SHT. #2 FOR PLAN W/ SECTION THRU STORAGE. -

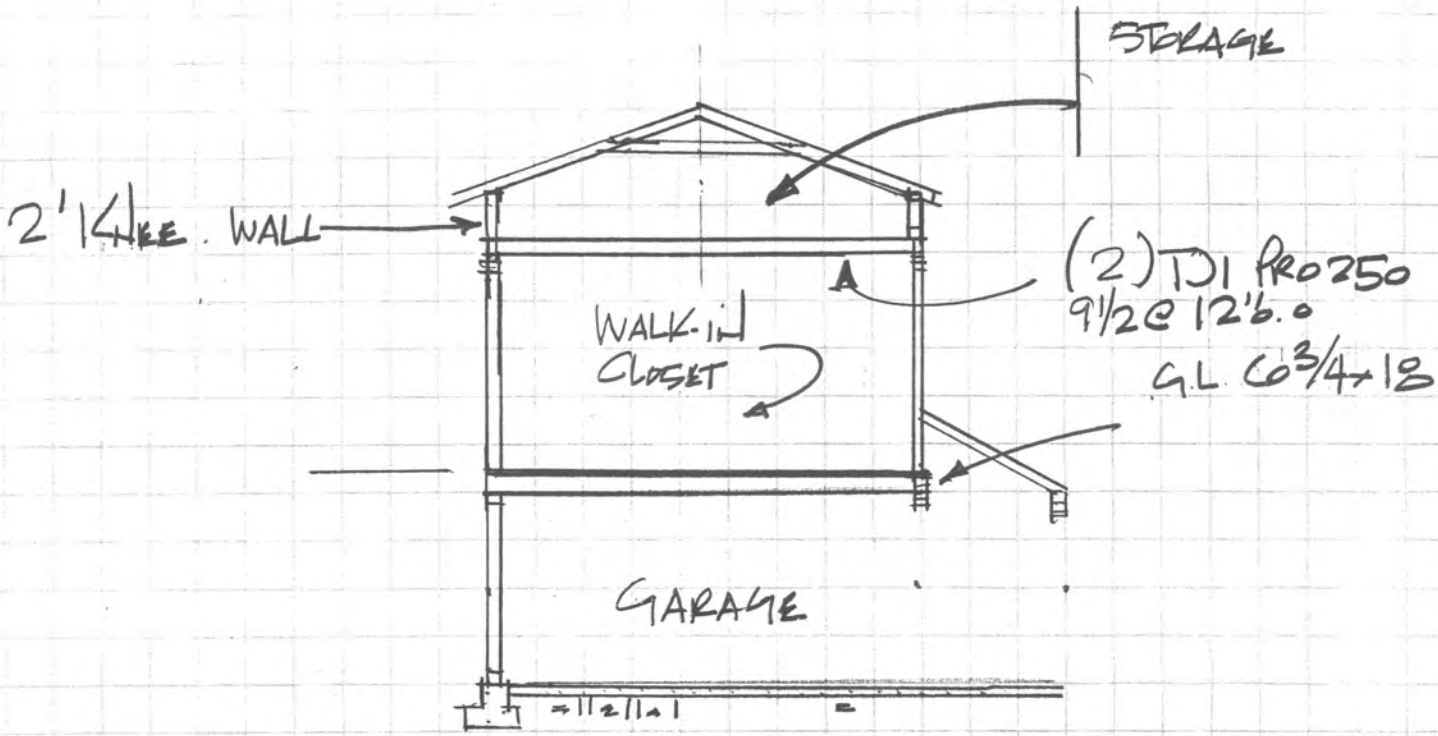

SECTION # A

MICHAEL MITCHELL
STATE OF WASHINGTON
20775
REGISTERED
PROFESSIONAL ENGINEER
EXPIRES 4/1/00

PREPARED BY M.M. PROJECT L.Z.L. CONSTRUCTION SHEET NO. #1 OF ___
DATE 1/5/99 SUBJECT PENTIAK - STORAGE - JOB NO. 98877

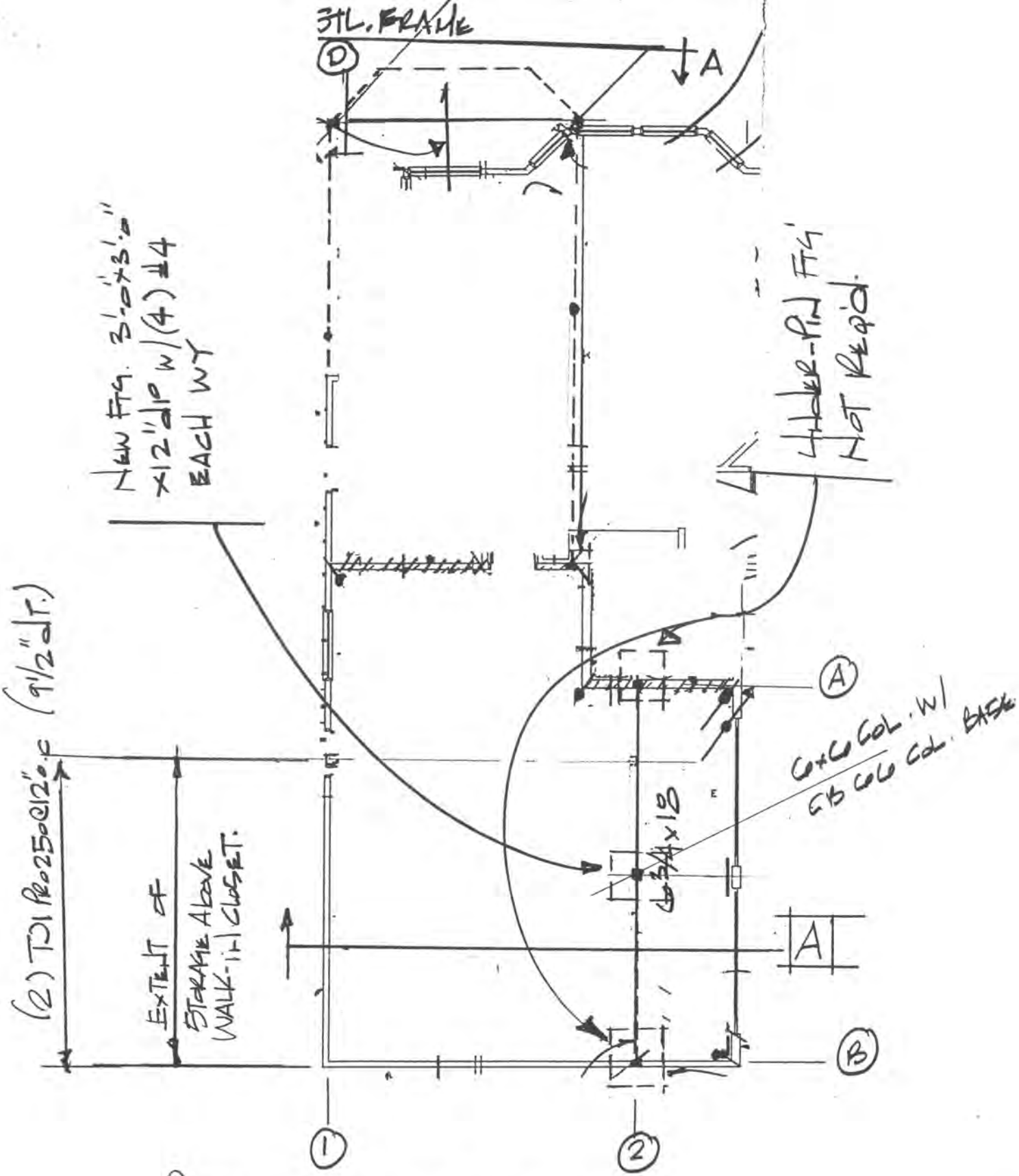

PARTIAL STORAGE FRAMING PLAN

L&L Construction - "PIENIAK"

Proj. # 98877

#2

MITCHELL ENGINEERING INC.

7821 - 168th Ave. N.E.
Redmond, WA 98052
(425) 747-1500

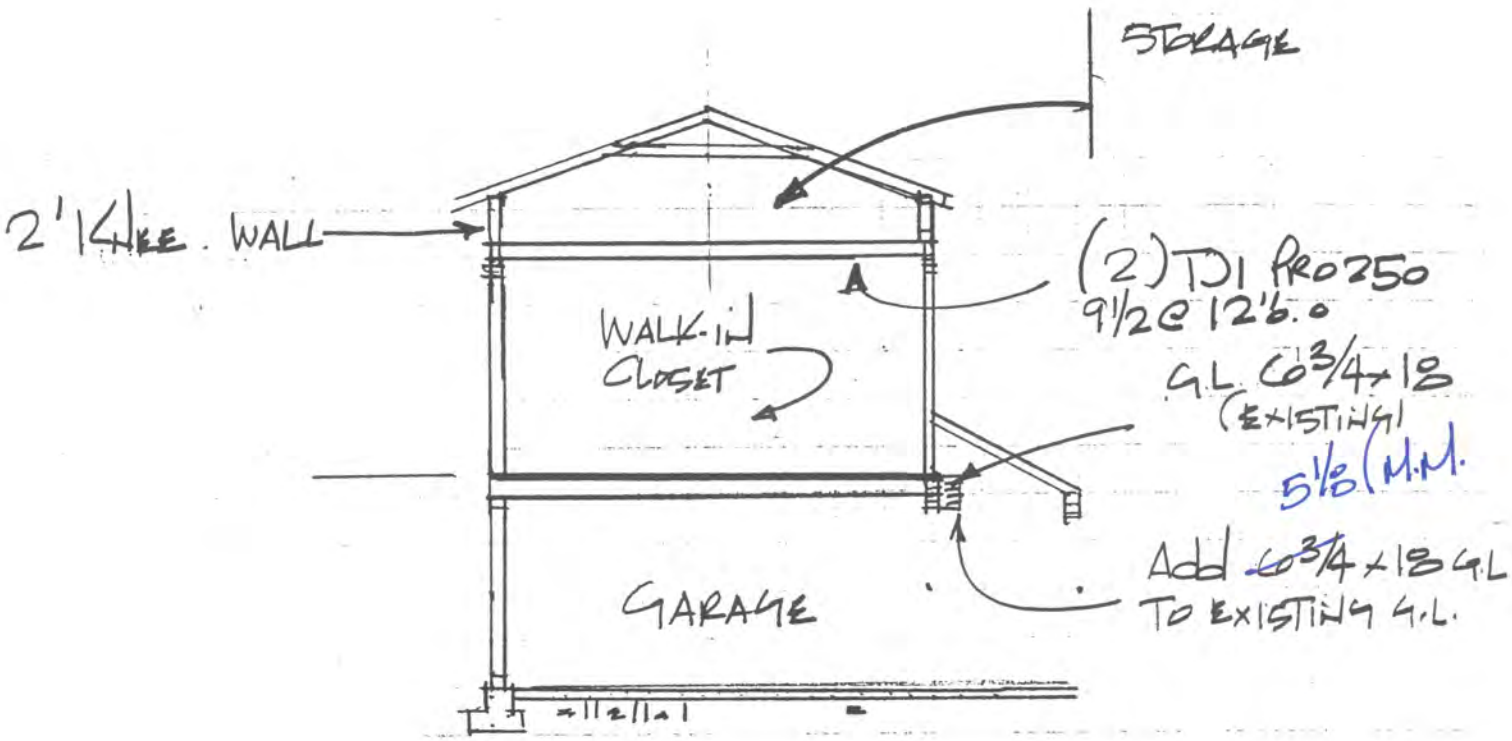

Section # A

PREPARED BY M.M. PROJECT L.Z.L. Construction SHEET NO. #3 OF ____

DATE 1/5/99 SUBJECT Pentak - Storage - JOB NO. 98877

MITCHELL ENGINEERING INC.

7821 - 168th Ave. N.E.
Redmond, WA 98052
(425) 747-1500

STORAGE FLOOR JOIST:

→ DUE TO REDUCED HEIGHT - BLDG OFFICIAL HAS SPECIFIED STORAGE LOAD OF 80 PSF

∴ $L_H = 17'\text{-}6''$

$W = 90\,PSF$

$M = 90 \times 17.5^2/8 = 3440\,FT\text{-}lb$

$V = 90 \times 8 = 720^{\#} \times 1.5 = 1080^{\#}$

LIMIT FLOOR JOIST TO 9 1/2 DEPTH

@ 16" o.c - $3440 \times 16/12 = 4590\,FT\text{-}lb \doteq 2 \times 3210\,FT\text{-}lb$

(2) TJI PRO $250 @ 16" o.c.

$\Delta @ L/360 = 0.59$

$W = 90 \times 16/12 = 120\,PLF$

$A = 22.5 \times 120 \times 17.5^4 / 185 \times 2 + \dfrac{2.67 \times 120 \times 17.5^2}{9.5 \times 10^5}$

1.36   .1 $-1.46/2$ .73

→ (2) 2TJ @ 12" o.c

BECAUSE G.L 6 3/4 x 18 WILL NOT CARRY NEW LOAD
Add POST

- W @ grid #2 - $90 \times 9' + 50 \times 9' + 3' \times 40 = 1380\,PLF$

L COLUMN LOAD $= (23'/2) \times 1380 = (16000/2000)^{1/2} = 3'\text{-}0'' \times 3'\text{-}0''$

PREPARED BY M.M. PROJECT L.Z.L. CONST. SHEET NO. #3 OF

DATE 1/5/99 SUBJECT PIENIAK - STORAGE JOB NO. 98877

MITCHELL ENGINEERING INC.

7821 - 168th Ave. N.E.
Redmond, WA 98052
(425) 747-1500

Adding new ftg./column will reduce load to ftg's @ grids 2A & 2B. - See if under-pinning is still req'd.

@ Grid 2B - 55' × 1380 = 7600#

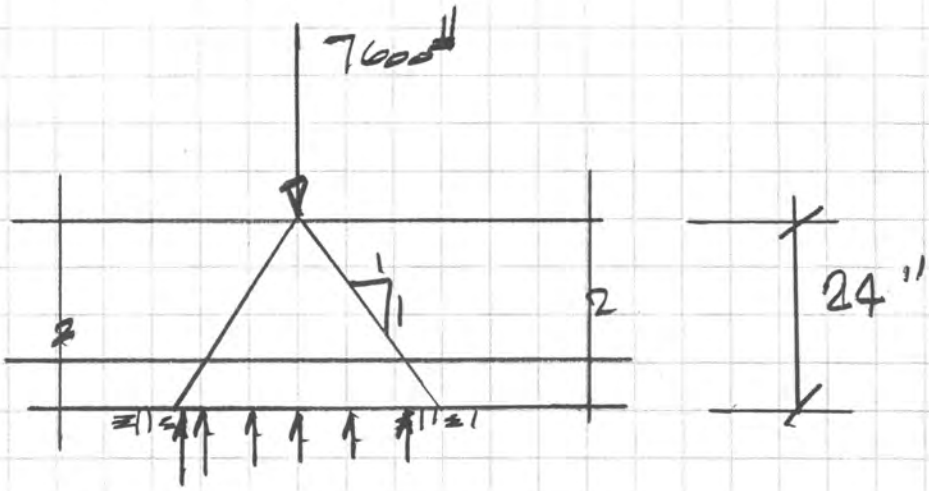

W/ 2000 PSF soil brg.

→ 4' × 1' × 2000 PSF = 8000 > 7600#

∴ under-pinning not req'd

PREPARED BY M.N. PROJECT L.Z.L. Const. - SHEET NO. #4 OF ___

DATE 1/5/99 SUBJECT Pentak - JOB NO. 98877

MITCHELL ENGINEERING INC.

7821 - 168th Ave. N.E.
Redmond, WA 98052
(425) 747-1500

SCOPE OF WORK:

→ LATERAL LOAD ANALYSIS @ SECTION OF GARAGE WHERE STORAGE ~~loc~~ AREA TO BE INSTALLED.

WIND FROM PREVIOUS DESIGN WOULD ONLY BE AFFECTED BY ADDITION OF STORAGE - 2' KNEE WALL WOULD INCREASE PROJECTION BY 2' BUT NOT SIGNIFICANT ENOUGH TO WARRANT RE-DESIGN - BUT DL OF STORAGE WILL CHANGE LATERAL SIGNIFICANTLY.

SEISMIC D.L.

→ @ STORAGE -

a.) ROOF - 22'x23'x15PSF = 7.6K
b.) KNEE WALL 72LF x 2' x 8PSF = 1.1K
} 8.7K

@ Living Floor:

a.) STORAGE - 18'x18'x80PSF = 30K
b.) WALLS - 4'x72'x8PSF = 2.3K
} 33K

@ GARAGE

a.) Living/Low Roof - 600 SF x 20PSF = 12K
b.) WALLS - 104LF x 8' x 8PSF = 7K
} 19K

V = 61K x .164 = 10K

MICHAEL MITCHELL
STATE OF WASHINGTON
20775
REGISTERED
PROFESSIONAL ENGINEER
EXPIRES 4/1/00

PREPARED BY M.M. PROJECT L.&L. Construction SHEET NO. #1 OF ____
DATE 1/10/99 SUBJECT PENIAK JOB NO. 98877

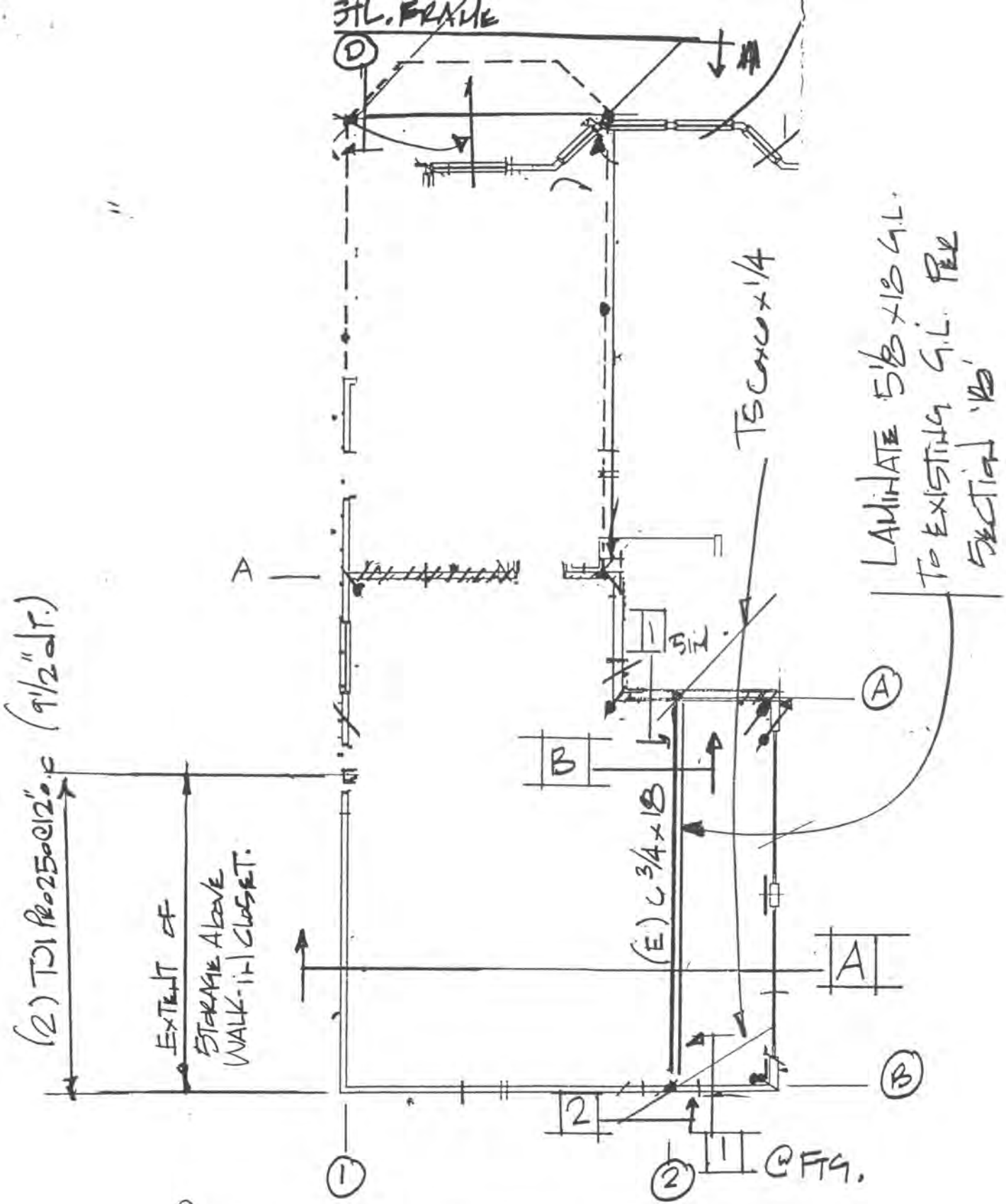

PARTIAL STORAGE FRAMING PLAN

L&L Construction - "PIENIAK"

Proj. # 98877

MITCHELL ENGINEERING INC.

7821 - 168th Ave. N.E.
Redmond, WA 98052
(425) 747-1500

$8.7^{k} \times 20^{k}$ = 174 FT-K − 20×10^{k} = 192^{k}
$33^{k} \times 17'$ = 561 FT-K − 6.1^{k}
$19^{k} \times 9'$ = 171 FT-K − 1.88^{k}
900 FT-K

∴ PREVIOUS DESIGN STILL O.K.

LOAD @ GRID # A − 5000# / 20' − 250 PLF
B − 5000# / 20' = 192 PLF − PREVIOUS DESIGN O.K

LATERAL @ GRID #2

V → 5000#

USE CANTILEVER STEEL COLUMN @ GRID A & B TO RESIST LATERAL FORCE @ grid # 2.

CHECK G.L. 6 3/4 × 18 (LL = 22'-6")

W - HIGH/LOW ROOF = 13' × 40 PSF = 520 PLF
STORAGE - 90 PSF × 9' = 810 PLF
FLOOR - 50 PSF × 9' = 450 PLF
WALL — 10' × 8 PSF = 80 PLF
} 1800 PLF

M → 1800 × 22.5²/8 = 117,703 × 12 / 2400 × 1.15 = 511 in³

6 3/4 × 18 = 348 in³ ∴ Need - 163 in³ ≈ 161
— Add 3/8 × 18 TO EXISTING = BOLT

PREPARED BY M.M. PROJECT L.Z.L. CONSTRUCTION SHEET NO. #4 OF ___
DATE 1/10/99 SUBJECT PIENIAK JOB NO. 98877

MITCHELL ENGINEERING INC.

7821 - 168th Ave. N.E.
Redmond, WA 98052
(425) 747-1500

SHEAR -

$1860 \times (22.5/2 - 1.5) \times 1.5 / 165 \times 1.15 = 143 \text{ in}^2$

$\rightarrow A - 92.25 + 56.25 = 148 \text{ in}^2 \geq 143 \text{ in}^2$

$\therefore 5\frac{1}{8} \times 18 \; ; \; 3\frac{1}{8} \times 18$

$\Delta @ L/240 = 1.12''$

$I_{Req'd} - 5 \times 1860 \times 22.5^4 \times 1728 / 384 \times 1.8 \times 10^6 \times 1.12$
$= 5416 \text{ in}^4$

$\therefore 3280 -$ Need 2130

$\therefore$ Add $5\frac{1}{8} \times 18$ To Exist. $6\frac{3}{4} \times 18$

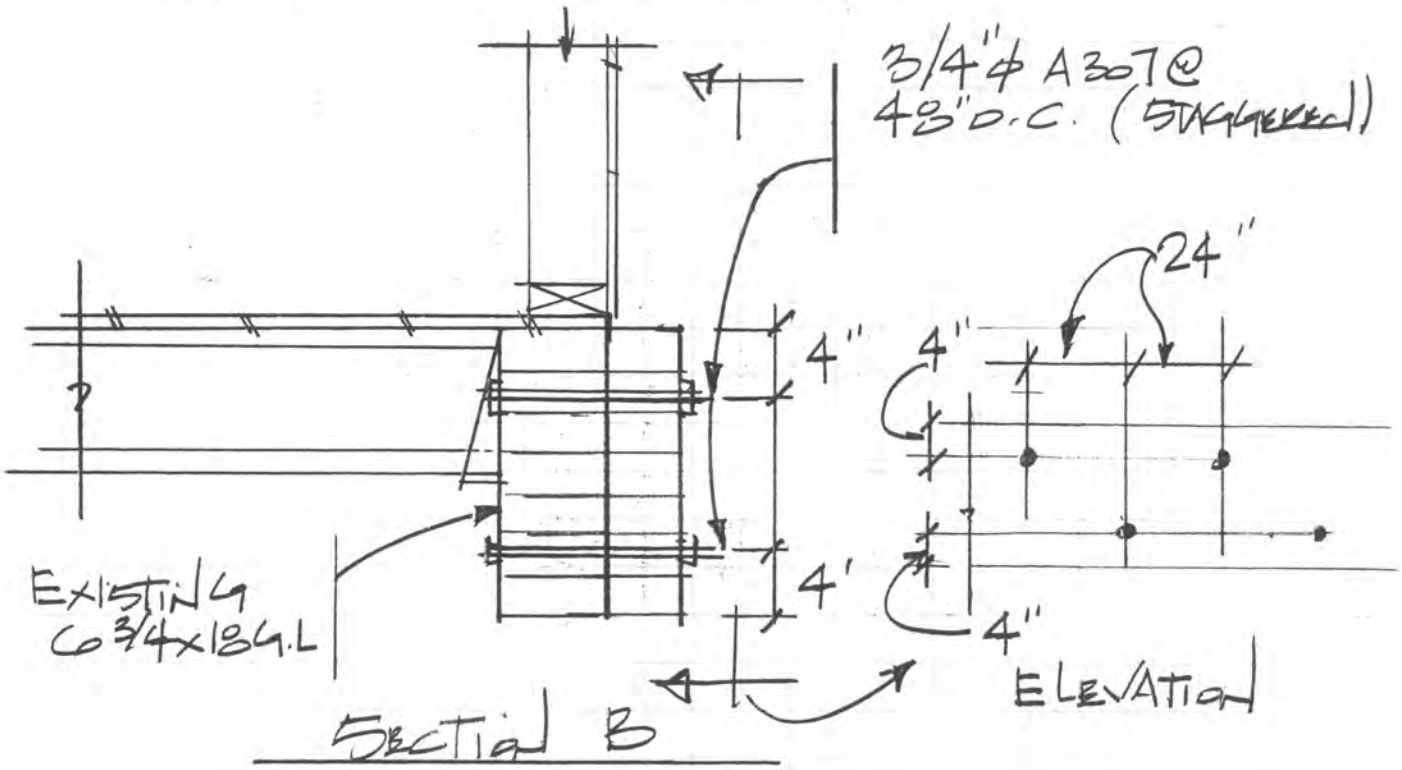

PREPARED BY M.M. PROJECT L.Z.L Const. SHEET NO. #5 OF ____

DATE 1/10/99 SUBJECT PIENIAK JOB NO. 98877

MITCHELL ENGINEERING INC.

7821 - 168th Ave. N.E.
Redmond, WA 98052
(425) 747-1500

CANTILEVER COLUMN:

→ M = 2500 × 8' = 20,000 × 12 / .66 × 36000 = 6.1

→ USE TS 6×6×1/4 -

FTG. Reqd - 1800×12' = 22300#

W/ 24" ϕ FTG - (22300/2000)^1/2 = 3.3 FT²

→ USE FTG. 3'-6" × 3'-6" × 12" DP.

CHECK EMB. (CONSTRAINED DUE TO SLAB.

W/ 3'-0" EMB.

→ d² = 4.25 × P.H / S3 × b -

~~3×3'×2~~ 0 S3 - 3×200×2 = 1200

(4.25 × 2500 × 9' / 1200 × 2')^1/2 - 6.3.

→ USE

W/ 4'-6" - 4.5×200×2 = 1800

- (4.25 × 2500 × 8' / 1800 × 2)^1/2 = - 4.8

PREPARED BY M.M. PROJECT L.Z.L. CONST. - SHEET NO. 6 OF ___

DATE 1/10/99 SUBJECT PIENIAK JOB NO. 98877

MITCHELL ENGINEERING INC.

7821 - 168th Ave. N.E.
Redmond, WA 98052
(425) 747-1500

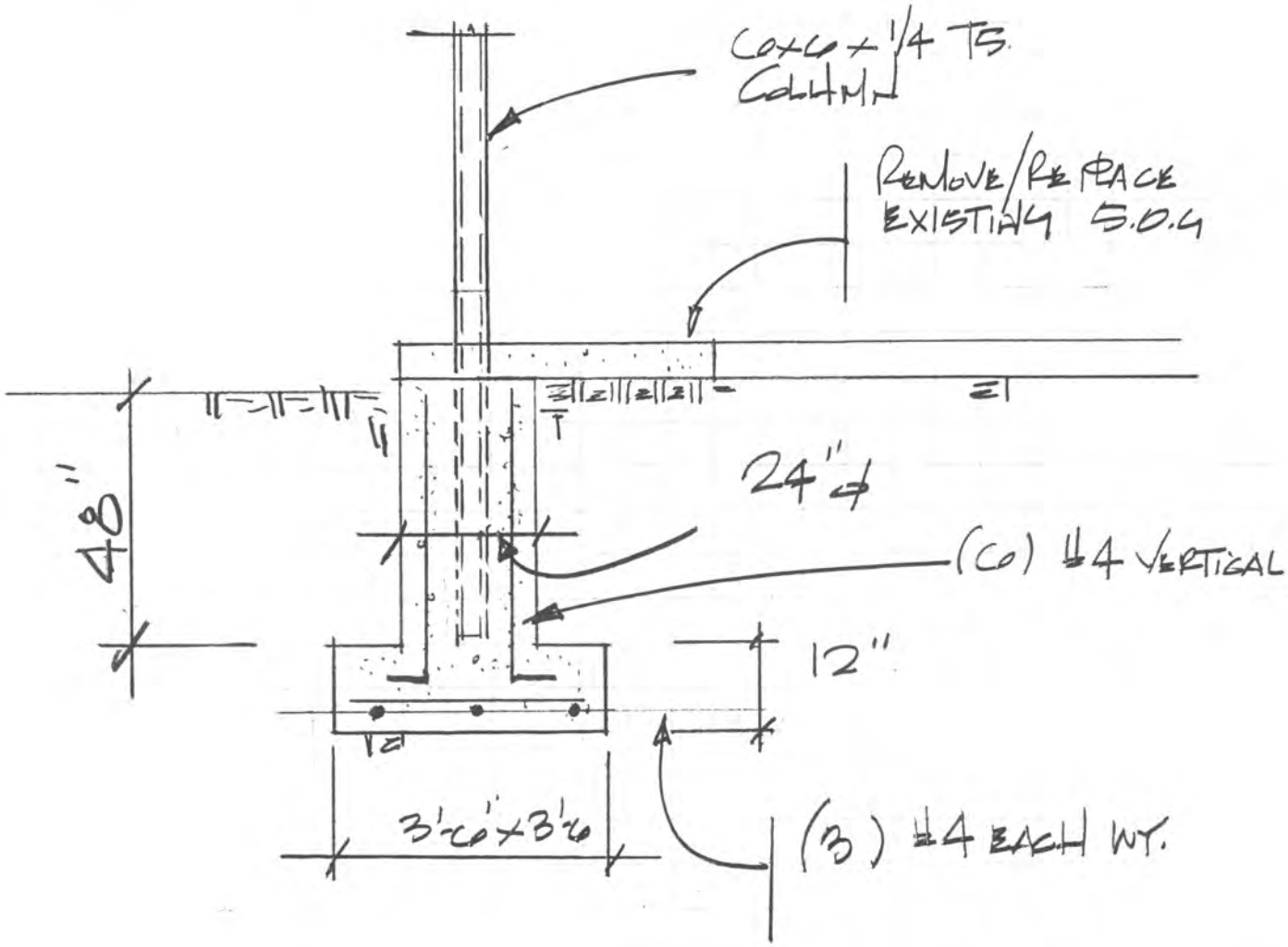

SECTION 1

PREPARED BY M.M. PROJECT L.E.L. CONST. - SHEET NO. 7 OF ____

DATE 1/10/99 SUBJECT PIERDAK JOB NO. 98077

MITCHELL ENGINEERING INC.

7821 - 168th Ave. N.E.
Redmond, WA 98052
(425) 747-1500

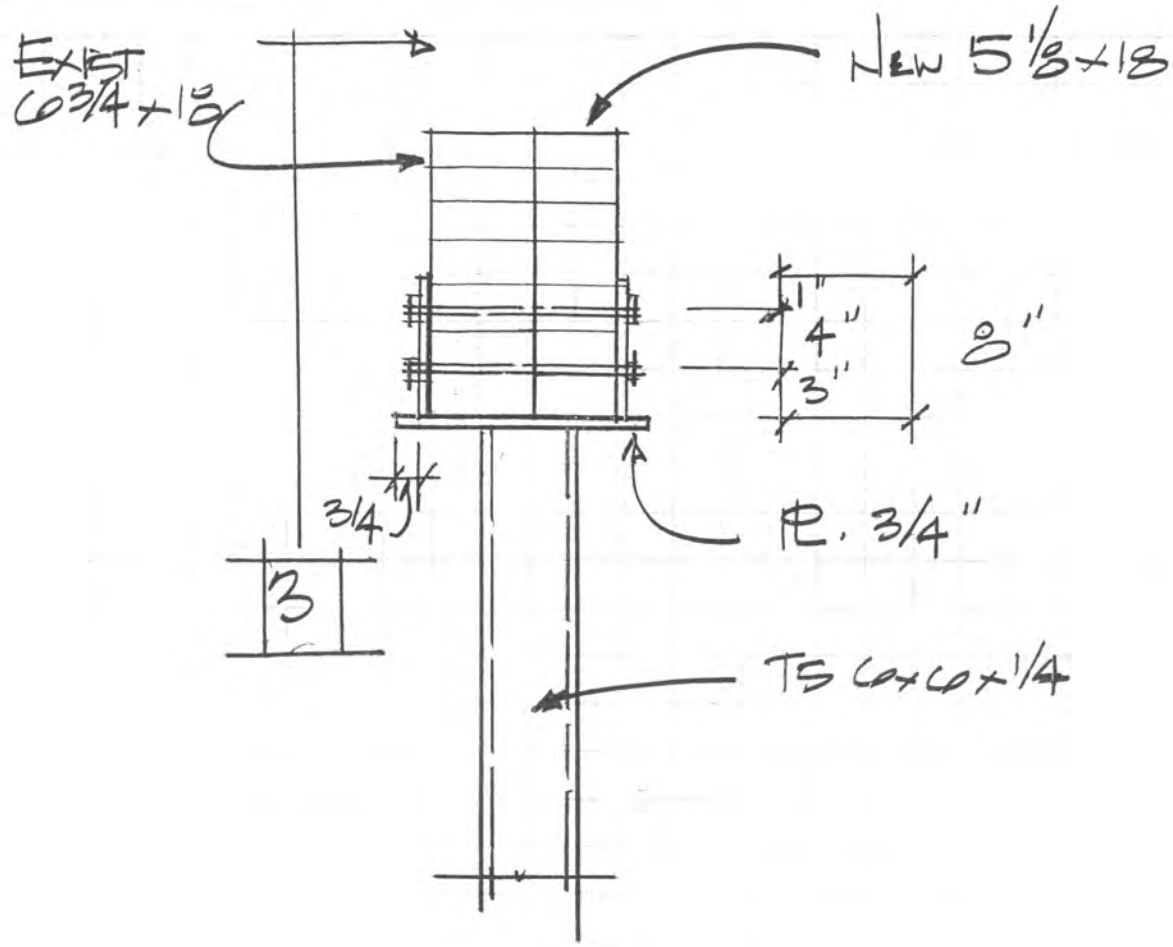

SECTION #2

PREPARED BY M.M. PROJECT L.2L. CONST SHEET NO. 8 OF ___

DATE 1/10/99 SUBJECT PENTAK JOB NO. 98877

MITCHELL ENGINEERING INC.

7821 - 168th Ave. N.E.
Redmond, WA 98052
(425) 747-1500

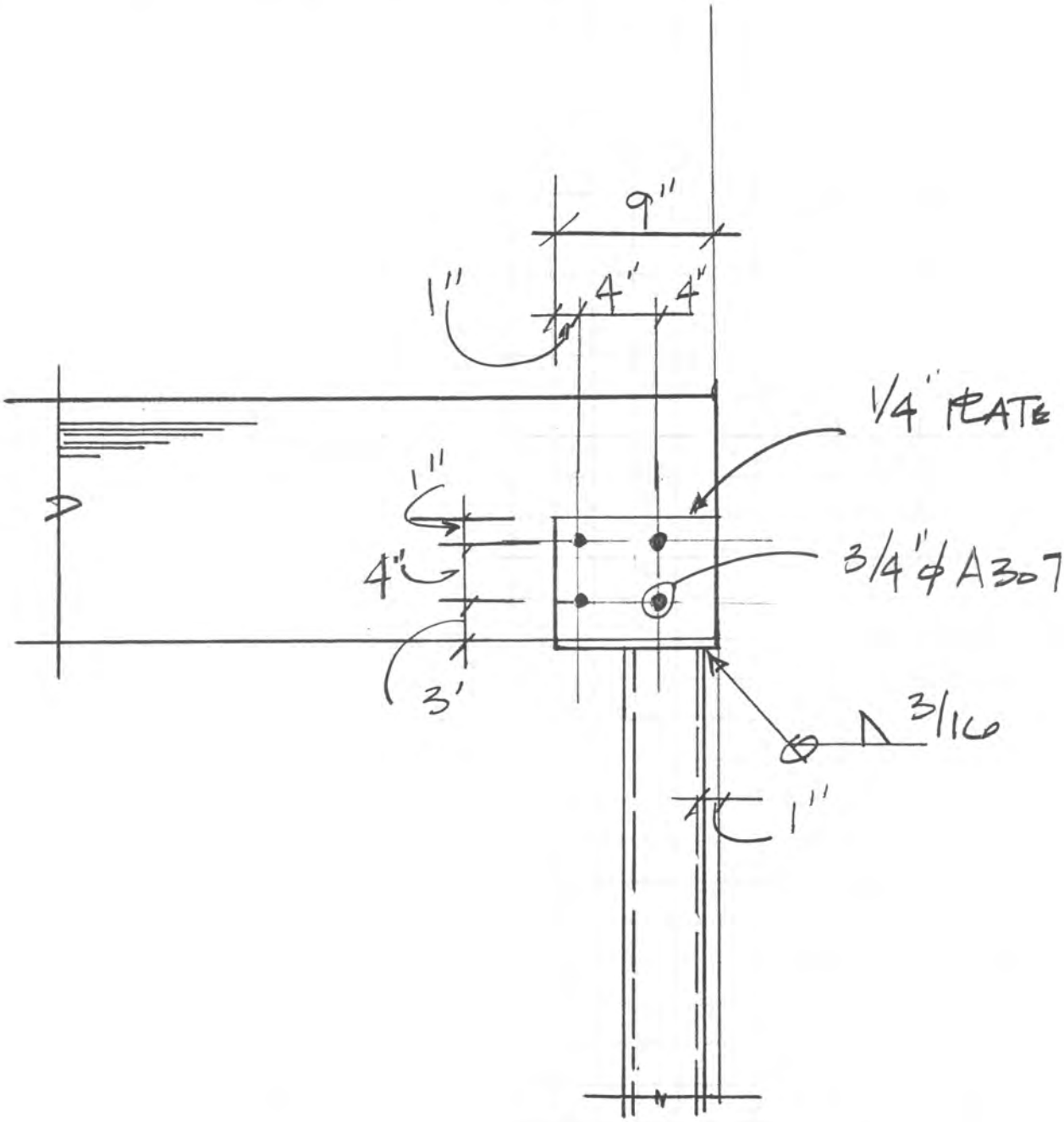

SECTION #3

PREPARED BY M.M. PROJECT L.Z.L. CONST.- SHEET NO. 9 OF ___

DATE 1/10/99 SUBJECT PENTAK JOB NO. 98877

HEINZ & GLORIA PIENIAK
25107 8TH PLACE SOUTH
DES MOINES, WA., 9819

RETAINING WALL WITH TI
BACKS

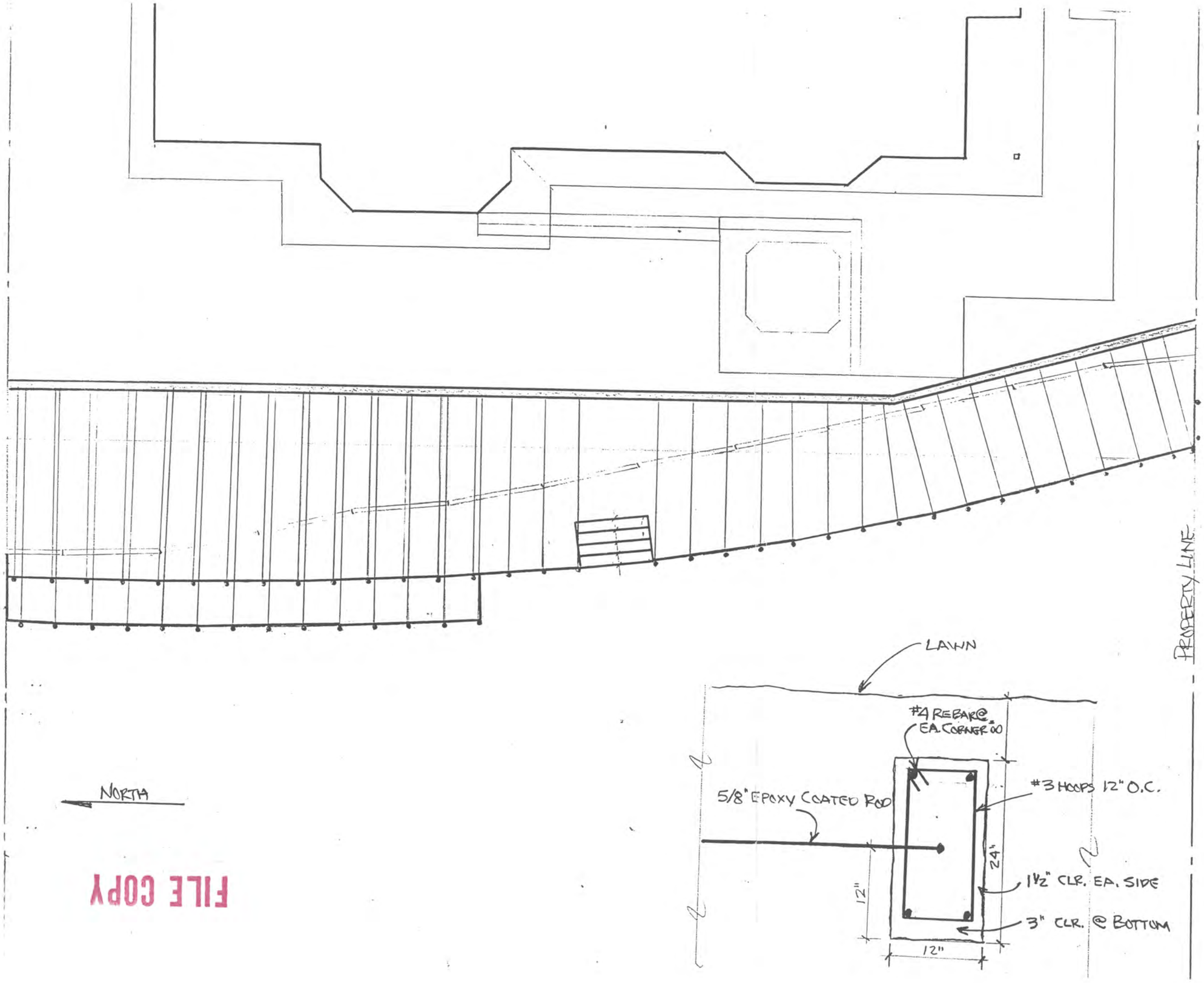

FILE COPY

HEINZ & GLORIA PIENIAK
25107 8TH PLACE SOUTH
DES MOINES, WA., 98198

RETAINING WALL WITH TIE BACKS

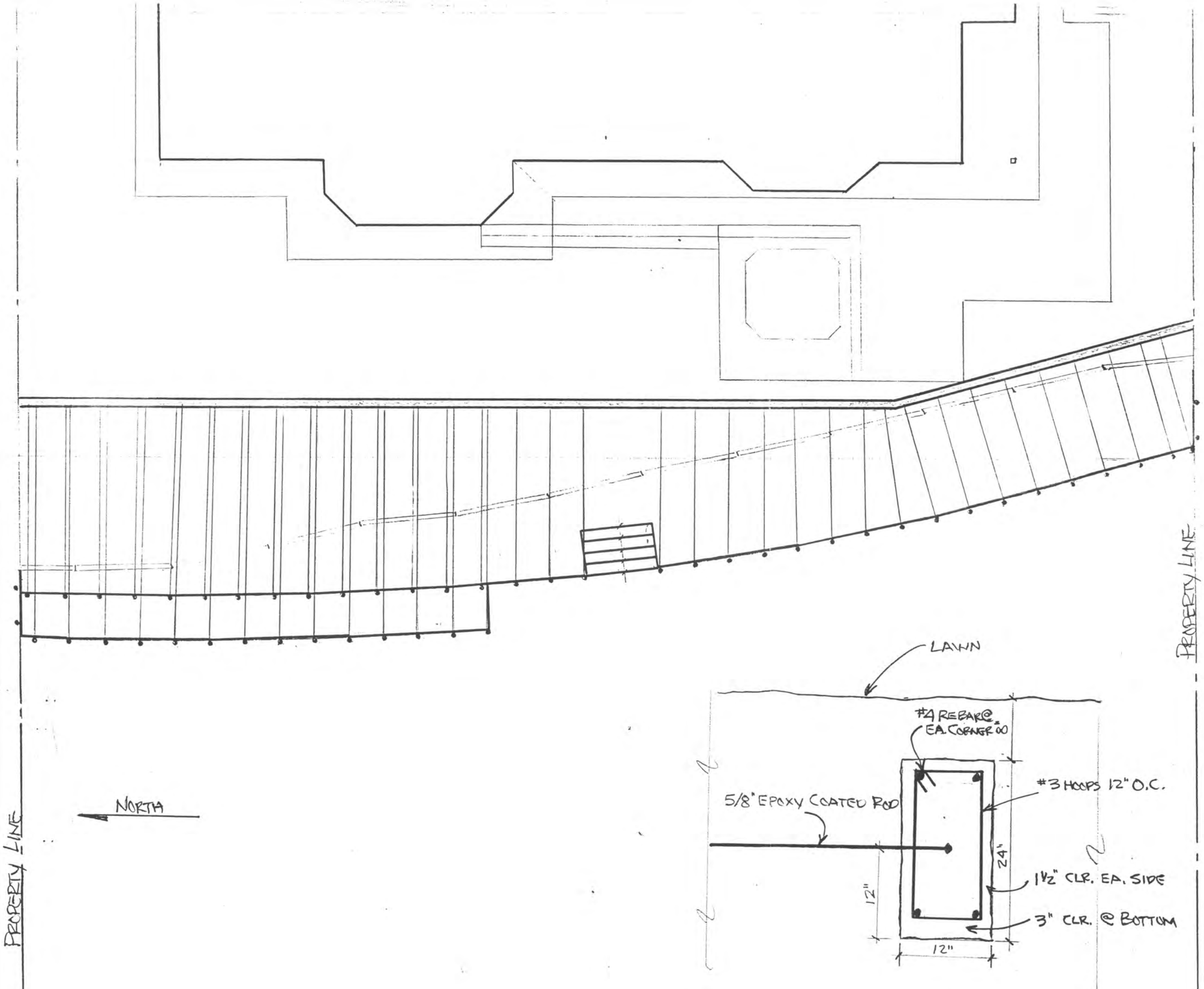

DUPLICATE RECEIPT DUPLICATE RECEIPT

CITY OF DES MOINES
COMMUNITY DEVELOPMENT,
BUILDING, AND PUBLIC WORKS

21630 11TH AV S, SUITE D
DES MOINES, WA 98198
OFFICE HOURS ARE 8:00 - 4:30 M-F

REG-RECEIPT:02-0012411 C:12-15-1998
CASHIER ID:T 15:01:00 A:12-15-1998

1400 BUILDING PERMIT BP3910 OWNR:PIENIAK	$1,049.75
3010 STATE BLDG. CODE F BP3910 OWNR:PIENIAK	$4.50
2009 RIGHT OF WAY SURCH PIENIAK 983910	$104.98
3024 BONDS/STREET CLEAN PIENIAK 983910	$500.00
3025 BONDS/PROPERTY PRO PIENIAK 983910	$1,000.00
TOTAL DUE	$2,659.23

RECEIVED FROM:
PIENIAK CK#0446

CHECK $2,659.23

TOTAL TENDERED $2,659.23

CHANGE DUE $0.00

CALL 870-7576 24 HOURS IN ADVANCE
TO SCHEDULE AN INSPECTION.

DUPLICATE RECEIPT DUPLICATE RECEIPT

LANDSLIDE EVALUATION
HEINZ AND GLORIA PIENIAK RESIDENCE
25107 8TH PLACE SOUTH
DES MOINES, WASHINGTON

G-0480

FEBRUARY 15, 1995

FOR

MR. MIKE SWINNERTON
CLAIM REPRESENTATIVE
STATE FARM INSURANCE

REC'D
S. SEATTLE
FEB 16 1995
FIRE CLAIMS

BY

GEO GROUP NORTHWEST, INC.
13240 NE 20TH STREET, SUITE 12
BELLEVUE, WASHINGTON 98005
PHONE (206) 649-8757

GEO Group Northwest, Inc.
Geotechnical Engineers, Geologists & Environmental Scientists

February 15, 1995 G-0477

Mr. Mike Swinnerton
State Farm Insurance Companies
6835 Southcenter Boulevard
Tukwila, WA 98188

Subject: Landslide Evaluation
Heinz and Gloria Pieniak Residence
25107 8th Place South
Des Moines, Washington 98198

Dear Mike:

At your request, Mr. William Chang from Geo Group Northwest, Inc. visited the Pieniak Residence on February 5, 1995. The purpose of the site visit was to perform a geotechnical evaluation to determine the cause of the landslide in the backyard of the Pieniak residence.

SCOPE OF SERVICES

Our scope of services for this project consisted of a site visit to make a visual evaluation of the landslide, interview Heinz and Gloria Pieniak and provide conclusions regarding the cause of the landslide.

FINDINGS

Site Conditions at the Pieniak Residence

The Pieniak residence is located at 25107 8th Place South in Des Moines, Washington, at the north side of Saltwater State Park as shown on Plate 1 - Geologic Map. The house is a two story structure located on a relatively level area at the top of a slope overlooking Puget Sound. At the west side of the house is a relatively level backyard lawn area approximately 25 feet in width (Photos 1 & 2). Beyond the level lawn area, is a steep slope which drops off at an estimated angle of 40 to 50 degrees to the horizontal (Photos 7 & 8).

13240 NE 20th Street, Suite 12 • Bellevue, Washington 98005
Phone 206/649-8757 • FAX 206/649-8758

The Landslide

We were informed by the homeowners that the slide took place about December 27, 1994 following heavy rains. At the time of our site visit, we observed that the steep slope below the backyard had experienced a slide, the scarp is located immediately below the railroad ties marking the edge of the landscaped lawn area (Photos 3, 4, 5 & 6).

During our site visit on February 5, 1995 we noted that the exposed slope scarp (Photos 2 & 3) consisted of loose soils, and we visually classified them as silty SAND with gravel.

Geologic and Soil Conditions

According to the geologic map for the area published by the U.S. Geological Survey, and shown on Plate 1 - Geologic Map. the site house is located in an area underlain by Glacial Till (Qgt), consisting of a very dense mixture of sand silt and gravel. The steep slope below the house is underlain by the Salmon Springs deposit (Qss), consisting of sand and pebbles, with local lenses of till, silt and clay.

Based on our observations of the slide scarp, it is our opinion that the builder of the house had pushed off some loose fills down the slope to maximize the size of a level backyard.

Chronology of Events

Based on our interviews with Heinz and Gloria Pieniak, we have assembled the following chronology of events.

1978 - Home was built.

1989 - Mr. and Mrs. Pieniak purchased home.

1994 - December 27, 1994 the slope below the backyard at the Pieniak residence suffered a landslide.

We understand that the vegetation on the slope was trimmed down every couple of years by Mr. Pieniak.

CONCLUSIONS AND RECOMMENDATIONS

Cause of the Landslide

Based on our observations, experience and conversation with the Heinz and Gloria Pieniak, it is our professional opinion that the landslide on the slope below the backyard of the Pieniak residence was due to:

1. **The existence of loose fill on the slope.**

2. **The fill was saturated by rain due to poor surface drainage control at the edge of the lawn.**

3. **The removal of vegetation possibly did not benefit the already marginal stability of the fill.**

Recommendations

At the present time we recommend that the following measures be undertaken to stabilize the slope and protect the existing yard:

1. Provide better control of surface water runoff from the backyard to the slope, such as the use of perforated pipes at the edge of impervious surfaces to capture water runoff, and tightline it for proper disposal.

2. Retain a geotechnical/structural engineer to design a wall to retain the backyard at the location of the slide. Design should consider use of Chance ground anchors.

3. Protect the exposed slopes with vegetation such as ivy. The use of jute nets or other similar products may be considered to promote vegetation growth on the slopes.

We do not recommend the addition of fill to the slope, as this will increase the driving forces, and may cause more slides on the slope.

We appreciate the opportunity to work for you on this project, if you have any questions regarding our report please call us.

Respectfully submitted,
GEO GROUP NORTHWEST, INC.

William Chang

William Chang, P.E.
Principal

WILLIAM CHANG
STATE OF WASHINGTON
20114
REGISTERED
PROFESSIONAL ENGINEER
EXPIRES 2/19/96

Attachments: Plate 1 - Geologic Map
Photo 1 through Photo 8

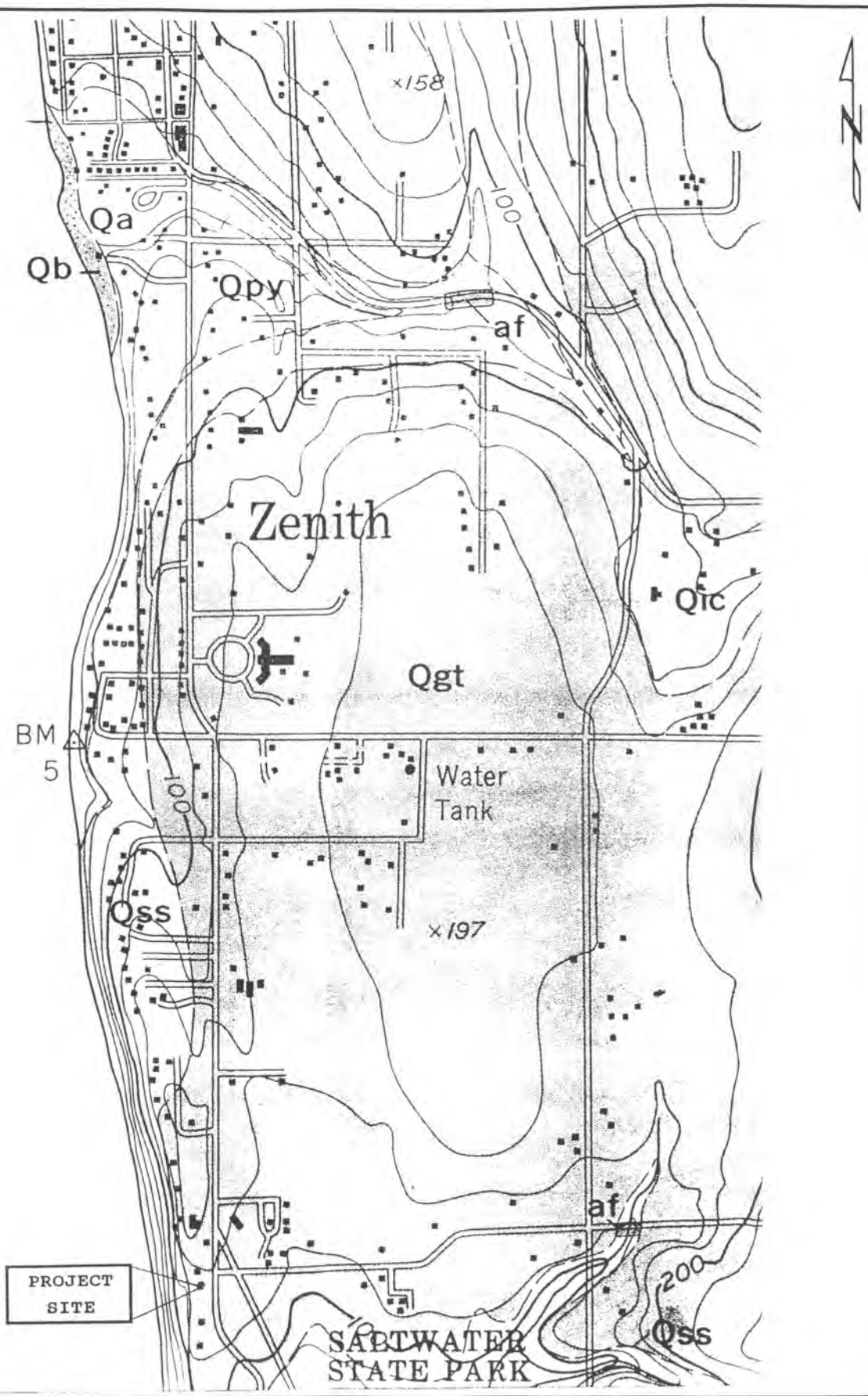

GEO Group Northwest, Inc.
Geotechnical Engineers, Geologists, & Environmental Scientists

Geologic Map

Heinz Pieniak Residence
25107 8th Place South
Des Moines, Washington

SCALE	DATE	MADE	CHKD	JOB NO.	PLATE
1" = 1000'	2/6/95	WC	WC	G-0480	1

PHOTO 1 - VIEW OF THE BACKYARD, FACING NORTH

PHOTO 2 - VIEW OF THE BACKYARD, FACING SOUTH.

PHOTO 3 - VIEW OF THE SLIDE, FACING NORTH.

PHOTO 4 - VIEW OF THE SLIDE, FACING SOUTH.

PHOTO 5 - VIEW OF THE SLIDE, FACING NORTH.

PHOTO 6 - VIEW OF THE SLIDE, FACING WEST.

DEPARTMENT OF LABOR AND INDUSTRIES

REGISTERED AS PROVIDED BY LAW AS
CONST CONT GENERAL

	REGIST. #	EXP. DATE
CC01	LZLCOI*085BA	04/01/1999
EFFECTIVE DATE		01/01/1992

L Z L CONSTRUCTION INC
18912 N CK PLWY STE 117
BOTHELL WA 98011-8016

F625-052-000 (8/97)

Detach And Display Certificate

Permit # _____

'91 WSEC Residential Compliance Check List, Zone 1

Chapter 6, Prescriptive Options for all R Occupancies

Heat source: OTHER (gas, oil, propane, heat pumps)

FILE COPY

Instructions:

1) *Carefully review the requirements of each of the options below. Choose an option that best suits your dwelling design. Glazing percentage typically determines which option to choose. Your building must match the selected Option requirements without exceptions or substitutions.*

2) *In the shaded areas on the pages that follow, make checks in the circles next to the requirements of your Option (the Option numbers are in paretheses next to the choices). Disregard components or equipment that don't apply to your project. Your permit will be processed more efficiently if you provide all of the requested information. Department staff can help you with general questions about this form.*

Can't comply? *If none of the Chapter 6 Options are acceptable, consider the Chapter 5, Component Performance, Approach. The main advantage is flexibility to juggle individual R and U-values as long as a n overall maximum value isn't exceeded. Note that the overall thermal requirements of Chapter 5 are no less stringent than Chapter 6. Calculations may be performed with a* ***Chapter 5, Component Performance Worksheet,*** *or by using an acceptable computer program such as* ***WATTSUN 5.1.***

	OPT I ○	OPT II ○	OPT III ○	OPT IV ○	OPT V ○	OPT VI (≤ 2 stories) ○	OPT VII (≤ 2 stories) ●
HVAC AFUE	≥ .78	≥ .78	≥ .88	≥ .78	≥ .74	≥ .78	≥ .78
Glazing max:							
% of floor	10%	12%	21%	21%	21%	25%	30%
U-value [2]	0.70	0.65	0.75	0.65	0.60	0.50	0.45
Door U-value [2]	0.40	0.40	0.40	0.40	0.40	0.40	0.40
(R-value)	(R-2.5)	(R-2.5)	(R-2.5)	(R-2.5)	(R-2.5)	(R-2.5)	(R-2.5)
Ceilings:							
with attics	R-30	R-30	R-30	R-30	R-30	R-38	R-30
vaulted	R-30	R-30	R-30	R-30	R-30	R-30	R-30
Walls:							
above grade	R-15	R-15	R-19	R-19	R-19	R-19	R-19
below grade							
interior	R-15	R-15	R-19	R-19	R-19	R-19	R-19
or *exterior*	R-10	R-10	R-10	R-10	R-10	R-10	R-10
Floor	R-19	R-19	R-19	R-19	R-19	R-25	R-25
Slab on grade	R-10	R-10	R-10	R-10	R-10	R-10	R-10

Footnotes:

1) The "≥" symbol means "more than or equal to"; "≤" means "less than or equal to".
2) Glazing & door U-values may be weighted if they don't exceed the Option U-value.

Plan Review

(For official use only)

Selected Option is appropriate for this dwelling design.

YES ☐

No ☐

Option ___ may be a better choice.

Notes: _____

Approved by: _____

Date: _____

1991 WSEC RESIDENTIAL COMPLIANCE CHECKLIST

Heat source: OTHER (gas, oil, propane, heat pumps), Zone 1

COMPLIANCE REQUIRED ☑ | INSPECTION APPROVED ☑

IMPORTANT: Supply information in the shaded area by checking the appropriate circles. Disregard topics that don't describe your building or equipment. DO NOT place checks in the two left columns.

FOUNDATION PHASE

☐ ☐ (1) **Slab insulation** (Table 6-2) shall be R-10 and located on the:
- ◯ A. *Exterior* (See INSULATION INSPECTION).

OR
- ◯ B. *Interior* extending downward from the top slab surface to its undersurface and horizontally under the slab for a total distance of 24", or vertically 24".

☐ ☐ (2) **Radiant Slab Insulation** (S. 502.1.4.9) shall be R-10 and extend under the entire slab

☐ ☐ (3) **Below grade masonry wall** insulation (S. 502.1.4.10) shall be full-depth and located on the:
- ◯ A. *Exterior* and rated R-10 (See INSULATION PHASE).

OR
- ◯ B. *Interior* (See INSULATION PHASE)

☐ ☐ (4) **Thermal break(s)** shall be placed in the slab (S. 502.1.4.8, 201.1: BUILDING ENVELOPE) between the conditioned and unconditioned spaces checked below, and extend from the top of the slab to the bottom, then underneath toward the conditioned space for a 24".

◯ dwelling/garage ◯ dwelling/connected space ◯ slab edge and foundation wall.

☐ ☐ (5) **Radon Requirements** (VIAQ, S. 502.1) shall be met if one of the following is checked:
- ◯ A. Net foundation ventilation area is less than 1 FT2 per 300 Ft2 of crawl space
- ◯ B. Foundation vents are closable.
- ◯ C. Crawl space acts as a supply, or return air plenum.

WSEC Foundation phase requirements:

Inspected by: _____ Date _____

FRAMING PHASE

☐ ☐ (6) **All structural panels** such as plywood, oriented strand board, particle board, and wafer board shall be labled "EXPOSURE I", "EXTERIOR", or "HUD-APPROVED". (VIAQ, S. 401.1)

☐ ☐ (7) **Insulation baffles** shall be placed in attics/ceilings to maintain at least 1" ventilation space and extend at least 6" vertically above batts or 12" vertically above loosefill insulation (S. 502.1.4.5).

☐ ☐ (8) **Glazing efficiency** required under the selected option shall be (S. 502.1.5, 602.7.2, Table 6-2):

◯ ≤ U.70 (Option I) ◯ ≤ U.65 (Options II, IV) ◯ ≤ U.75 (Option III)
◯ ≤ U.60 (Option V) ◯ ≤ U.50 (Option VI) ● ≤ U.45 (Option VII)

Symbols used: = *equals* > *greater than* < *less than* ≥ *greater than or equal* ≤ *less than or equal*

UPDATED SEPTEMBER 1991

1991 WSEC RESIDENTIAL COMPLIANCE CHECKLIST

COMPLIANCE REQUIRED ☑

INSPECTION APPROVED ☑

IMPORTANT: Please supply information in the shaded boxes and check the appropriate circles. Disregard topics that don't describe your building or equipment. DO NOT place checks in the two left columns.

FRAMING PHASE (Continued)

☐ ☐ **9** Glazing/skylights by type — See the Washington glazing directory

No.	Manufacturer	Frame material	# Layers	Model #	Area (Ft2)	Uo value	Tested?
F+G	ANDERSEN	WOOD	2	AN351	11.6	U.30	Yes ●
F+G	ANDERSEN	WOOD	2	CP355	33.9	U.30	Yes ●
E+H	ANDERSEN	WOOD	2	AN31	10.2	U.30	Yes ●
E+H	ANDERSEN	WOOD	2	CXW15	29.9	U.30	Yes ●
MN OP	ANDERSEN	WOOD	2	AN251	16.2	U.30	Yes ●
OP MN	ANDERSEN	WOOD	2	CW15	47.2	U.30	Yes ●
L	ANDERSEN	WOOD	2	CW125	5.6	U.30	Yes ●
K	ANDERSEN	WOOD	2	CW135	8.0	U.30	Yes ●
SKY LIGHTS	VELUX	WOOD	2	VS10H TYPE 74	10.6	U.30	Yes ●
						U.___	Yes ○

☐ ☐ **10** Single Glazing (No more than 1% of heated floor area before doubling, S. 602.7.2)

Type:	No:	Area:	X2		U.___	Yes ○
Type:	No:	Area	X2		U.___	Yes ○

☐ ☐ **11** Untested Glazing (Use only default U-values in Chapter 10, S. 1006.1)

Type:	No:	Area:		U.___
Type:	No:	Area:		U.___
TOTAL GLAZING AREA (Add entire column)			→ 173.2	

☐ ☐ **12** Maximum Allowed glazing area(S. 602.7.1) is derived by taking the the total glazing area of 173.2 Ft2 and dividing by the total conditioned floor area of 577 Ft2. Multiply this number by 100. This value can't exceed the glazing percentage for your selected option:

○ ≤ 10% (Option I) ○ ≤ 12% (Option II) ○ ≤ 21% (Options III, IV, V)
○ ≤ 25% (Option VI) ● ≤ 30% (Option VII)

☐ ☐ **13** Documentation insufficient, U-values shall be justified by Mfr. testing report.

☐ ☐ **14** Glazing air leakage(S. 502.4.3 (c)) measures shall be met as follows :
- ☐ fixed site built: stops with sealant.
- ☐ operating site built: weatherstripped with closer

☐ ☐ **15** Concealed insulation shall be placed: ☐ behind shower/tub ■ behind partition studs/corner

☐ ☐ **16** Standard air leakage (S. 502.4.3) caulking is complete and installed in the following locations :
1) between Sole plate/subfloors
2) wiring/plumbing/duct register penetrations
3) rim joists/mud sills (heated lower floors)
4) partition stud penetrations
5) light fixture/ flue penetrations
6) around window and door f---

IMPORTANT: Supply information and check appropriate circles in the shaded boxes. Disregard topics that don't describe your building or equipment. DO NOT place checks in the two left columns.

FRAMING PHASE (Continued)

☐ ☐ 17 Exhaust ventilation shall be provided for each dwelling unit as follows (VIAQ S. 303):

Location	Minimum at .25 w.g.	Mfr./model	Fan label CFM(.1W.G.)
Kitchen fan	100 CFM		
Bathroom fan(_____)	50 CFM		
Bathroom fan(_____)	50 CFM		
Bathroom fan(_____)	50 CFM		
Laundry fan	50 CFM		
18 Whole house fan* *(choose one)*	◯ 50 CFM (1-2 bedrms)		
	◯ 80 CFM (3 bedrms)		
	◯ 100 CFM (4 bedrms)		

Whole house fan: Location _____ Sone rating_____ (≤ 1.5 if attic fan closer than 4' to ceiling)

◯ Whole house fan is listed/labled "for Continuous use".
◯ Whole house fan wiring for control routed to central location *(dehumidistat only)*.

☐ ☐ 19 ***Whole house fan also serves as a kitchen or bath spot fan.** ◯ Yes ● No
If a spot fan is designated as a whole house fan, the capacity shall be the larger CFM requirement.

☐ ☐ 20 **Whole house fan** shall run continuously: Kitchen (25CFM); Bath & laund. (20CFM) ◯ Yes ◯ No

☐ ☐ 21 **Integrated forced-air furnace ventilation** (IAQ Code, S. 303.1.2(b)) shall be synchronized with a whole house fan to supply fresh air to the dwelling: ● Yes ◯ No

● If yes, a 6" outside air inlet duct w/ motorized damper shall run from the building exterior to to the furnace return plenum and limit the ventiltion rate to between .35 - .50 Air Changes/Hour.

◯ Modifications to the above integrated forced air system may require performance testing, in a manner acceptable to the Building Official, to demonstrate .35 - .5 air changes per hour.

☐ ☐ 22 **Mechanical ventilation fan ducts** shall be ≥ 4" and properly sized (VIAQ,Table 3-3).

☐ ☐ 23 **Fresh air** shall be provided for each dwelling unit as follows (VIAQ, S. 302.6.1):

◯
- **Each bedroom:** Tested, screened, controllable, through-wall port (≥ 4 Sq. in.) to the exterior.
- **Each Recreation room:** One wall port as specified for bedrooms.
- **Other enclosed "habitable" rooms:** One wall port as specified for bedrooms.
- **Overall living area:** One wall port as specified for bedrooms.

☐ ☐ 24 OR ● **Central forced air furnace** which delivers outside makeup air through the ducting system.

☐ ☐ 25 **Recessed lighting fixtures** (S. 502.4.4) shall comply w/ one or more of the following:

● IC rated, with no slots or holes in cans, caulked or sealed between can and ceiling
● IC rated with lable certifying an ASTM E283 tested airleakage ≤ 2.0 CFM
◯ Any UL listed fixture enclosed by a 1/2" gypboard box or other manufactured box w/ 1/2" clearance to combustables, and 3" clearance to insulation.

WSEC Framing phase requirements:
Inspected by _____ *Date* _____

COMPLIANCE REQUIRED ☑

1991 WSEC RESIDENTIAL COMPLIANCE CHECKLIST

Heat source: OTHER (gas, oil, propane, heat pump), Zone 1

INSPECTION APPROVED ☑

IMPORTANT: Please supply information in the shaded boxes and check the appropriate circles. Disregard topics that don't describe your building or equipment. DO NOT place checks in the two left columns.

INSULATION PHASE

☐ ☐ (26) **Exterior slab insulation,** *if not located on the interior,* shall be R-10 (Table 6-2).

☐ ☐ (27) **Exterior slab insulation,** *if present,* shall approved for below grade use and protected above grade.

☐ ☐ (28) **Walls**, including rim joists, shall be insulated without compression to (Table 6-2):
○ R-15 batt (Options I,II) ● R-19 (Option III, IV, V, VI, VII)

☐ ☐ (29) **Interior below grade walls** shall be insulated without compression to (Table 6-2):
○ R-15 (Options I, II) ○ R-19 (Options III, IV, V, VI, VII)

☐ ☐ (30) **Vaulted ceilings** shall be insulated without compression to R-30 (Table 6-2, All options)

☐ ☐ (31) **Skylight wall insulation** is installed and equivalent to the required wall R-values above.

☐ ☐ (32) **Vapor retarders** shall be installed toward the warm surface as represented below (502.1.6):
Select one option for floors, walls, and appropriate ceilings:
Floors: ● Plywood W/ exterior glue ○ Poly (≥ 4 Mil) ○ Backed batts
Walls: ○ Poly plastic (≥ 4 Mil) ○ Face-stapled, backed batts ● PVA paint
Ceilings: ○ Not required where ventilation space averages >12" above insulation.
○ Face stapled backed batts ○ Poly plastic (≥ 4 mil) ● PVA paint

☐ ☐ (33) **Heating system efficiency and sizing** requirements shall be met as represented below:

☐ ☐ (34) **Heat Pump efficiency** shall be met under the following compliance path (S. 503.4):
○ Split system, air source heat pump: HSPF ≥ 6.8, COP > 3.0
○ Single package, air source heat pump: HSPF ≥ 6.6, COP > 3.0
○ Water source heat pump: COP ≥ 3.8
○ Ground source heat pump COP ≥ 3.0

☐ ☐ (35) **Central force-air furnace AFUE** rating, as listed in the GAMA Directory, shall be:
● ≥ .78 (Options I, II, IV, VI, VII) ○ ≥ .88 (Option III)) ○ ≥ .74 (Option V)

☐ ☐ (36) **Non-central, combustion heating systems** shall have intermitent ignition

☐ ☐ (37) **Maximum heating system output** (150% of design heat load) is 120,000 BTU/hr. (S. 503.2.2)

☐ ☐ (38) **High efficiency forced-air furnace** (≤ 56,000 BTU/hr. output)may may exceed 150%of DHL because: ○ GAMA listed AFUE is ≥ 78 + 1 per each 5000 BTU/hr output that it exceeds the DHL.

WSEC Insulation phase requirements:
Inspected by: _____ ***Date*** _____

FINAL PHASE

☐ ☐ (39) **Envelope Floors** shall be insulated without compression, and with support ≤ 24" O.C. to:
○ R19 (Options I, II, III, IV, V) ● R25 (Options VI, VII)

☐ ☐ (40) **Non-vaulted, attic ceilings** shall be insulated without compression to:
● R-30 (Options I, II, III, IV, V, VII) ○ R38 (Option VI)

See Table 6-2

☐ ☐ (41) **Door systems shall meet:** ○ U.40 (All options)
Door types are (1)_____ (2)_____ (3)_____

IMPORTANT: DO NOT place checks in the two left columns.

FINAL PHASE (Continued)

☐ ☐ (42) **Exposed foam insulation** shall comply as follows (S. 502.1.4.7):
- ☐ Protected with metal or plastic flashing, or other suitable material that extends below grade.
- ☐ Insulation is approved for sub-grade, exterior use and properly installed.

☐ ☐ (43) **Airflow** between fresh air ports and the whole-house fan ensured by undercut doors/grills(VIAQ,S. 302.6.4)

☐ ☐ (44) **Loosefill insulation** OK if (S.502.1.4.5):
- ☐ maximum ceiling slope not > 3 in 12
- ■ ≥ 30" of clear distance from top of bottom chord to underside of roof sheathing at the roof ridge.

☐ ☐ (45) **6 mil black polyethylene** ground cover, shall be lapped 12" at joints and extend to foundation wall

☐ ☐ (46) **Clearances** shall meet listed minimums between insulation and (S.502.1.4.3):
- ☐ chimney ☐ Non-IC rated recessed lights: 1/2" to combustables, 3" to insulation.

☐ ☐ (47) **Attic hatch** shall be insulated to required ceiling R-value and is weatherstripped (S.502.1.4.4)

☐ ☐ (48) **Attic access shall have wood dam** or equivalent to retain loose fill insulation in attic(S. 502.1.4.4)

☐ ☐ (49) **All exterior doors** (except 20 minute doors) shall be weatherstripped (S. 502.4.3).

☐ ☐ (50) **Service hot & cold water piping** in unconditioned spaces shall be insulated to R-3(S. 503.11)

☐ ☐ (51) **Service recirculation hot water piping** in unconditioned spaces shall be insulated to Table 5-12 levels.

☐ ☐ (52) **Heat pump thermostat** shall have progamable capability (S. 503.8.3.5)

☐ ☐ (32) **Thermostat** provided for each HVAC system with range of 55-75° F.(heating) (S.503.8.1.1).

☐ ☐ (54) **Readily accessible, automatic or Manual means** provided to restrict or shut-off Heating input to each zone or floor during periods not requiring heat (S. 503.8.3.1).

☐ ☐ (55) **Controls for backup heat** prohibit similtaneous operation of the primary system (S. 503.2.2(3)).

☐ ☐ (56) **Mechanical ventilation** system shall have proper timers, and/or switches (VIAQ, S. 302.3).

☐ ☐ (57) **Mechanical ventilation ducts** shall have R-4 insulation in unconditioned spaces (VIAQ, S. 302.5)

☐ ☐ (58) **Mechanical ventilation supply ducts** in conditioned spaces shall have R-4 insulation (VIAQ, 302.5)

☐ ☐ (98) **Supply ducts** shall have volume dampers, or the equivalent, to balance system (S. 503.6).

☐ ☐ (60) **Supply and return air ducts** shall have sealed duct joints in unconditioned spaces (S. 503.10.2).

☐ ☐ (61) **HVAC plenums, supply, and return air ducts** shall have R-8 insulation (Table 5-11, All options)

☐ ☐ (62) **Electric water heater(s)** shall have (S. 504.2.1, 504.3, 504.4) :
- ☐ separate power shut-off
- ☐ 1987 NAECA Lable on tank
- ☐ noncompressible R10 pad (unheated spaces only)
- ☐ Temperature setting ≤ 120 F.

☐ ☐ (63) **Showers and lavatories** shall limit flow to ≤ 3.0 gallons/minute (S. 504.8.1).

☐ ☐ (64) **Swimming pools**(S. 504.5) shall have:
- ☐ readily accessible ON/OFF switch (pump, heater) ☐ Pool cover ☐ Piping insulated to S. 503.11

☐ ☐ (65) **All fireplaces** (VIAQ, S. 402.3) shall have:
- ☐ 6 square inch combustion air supplyduct w/ accessible damper directly connected to the fire box
- ☐ Tight fitting glass or metal doors. ☐ Tight fitting flue damper

☐ ☐ (66) **Solid fuel burning appliance(s)** (VIAQ, S. 402.2) shall have:
- ☐ Tight fitting glass or metal doors
- ☐ Outside combustion air source directly connected to the fire box
- ☐ Exception: Non-direct, 4" diameter, dampered, combustion air source: allowed only for (1) new stove installations in existing homes where obstructionsprecludes direct combustion air, or (2) Central heating systems located in unheated spaces.

☐ ☐ (67) **Three month, etched track radon monitor,** printed instructions, and information sheets shall be supplied to the single family dwelling or first floor units of multi-family dwellings by the general contractor (VIAQ,S. 502.2.1),

WSEC Final phase requirements:

*Inspected by:*_____ *Date*_____

LZL CONSTRUCTION, INC.

18912 N. Creek Pkwy, Ste. 117
Bothell, Washington 98011
E-Mail: lzl@wolfenet.com
Phone: (425)485-3877
Fax: (425)485-2749

FILE COPY

Robert,

1) Here is the detail for the footing extension on the Pieniak Addition. As discussed with the soils engineer, this is overkill or at least a very good margin of safety. As far as the structural engineer goes, he is not worried about undermining the footing by 3" as long as it is done before the new structure is added.

2) The soils engineer mailed a stamped copy of the soils report to you.

3) I would like to remove the glass breezeway from this set of drawings. We will submit separately for it at a later date.

Hopefully I have addressed all of your concerns before issuing a permit.

Please call me with any questions or a date the permit might be ready.

Thank you

Doug Pellett

BRYAN

City of Des Moines

COMMUNITY DEVELOPMENT
805 SOUTH 219TH STREET
DES MOINES, WASHINGTON 98198-6340
(206) 878-8626 FAX: (206) 870-6544

RESUBMITTAL/REVISION COVER SHEET

☒ Resubmittal ☐ Revision

Resubmit only to the Community Development Department

DEPARTMENT TO RECEIVE THE RESUBMITTAL BOB

Date: 1/28/99 Project Number: 95 3910

Project Information

Project Address: 25107 8TH PLACE SOUTH, DES MOINES, WA 98195

Type of Project: SECOND STORY ADDITION
(New building, TI, Mechanical, etc.)

Applicant Information

Contact person: BRYAN REIGHTLEY - LZL CONSTRUCTION

Name: Telephone Number: (425) 864-0344

Address: (206) 978-7014 (PAGER)

Changes must be highlighted or clouded on construction drawings.

DESCRIBE RESUBMITTAL (BE SPECIFIC):

UPDATE WINDOW SCHEDULE USING ENTIRE CONDITIONED FLOOR AREA. ADD (1) WINDOW AND (2) SKYLIGHTS. ADJUST WINDOW SIZES TO SITE CONDITIONS. TOTAL % OF GLASS AREA DROPS 3%

FOR OFFICE USE ONLY

ROUTING:	APPROVED BY:	DATE
☐ Community Development		
☐ Engineering		
☐ Fire Department		
☒ Building	Rod S. [illegible]	3-4-99
☐ Other		

Plan Check Fees: ____hrs. @ $50/hr.=

Inspector Fees: ____hrs. @ $50/hr. =

p:\forms\1017

The Waterland City
Printed on Recycled Paper

1994 WASINGTON STATE ENERGY/VENTILATION CODES RESIDENTIAL SUBMITTAL FORM
OTHER THAN ELECTRIC RESISTANCE HEAT

Applicant: BRYAN REKHTLEY LZL CONSTRUCTION Tracking#: _____ Date: 1/28/99

Job Type: ☐ New ☒ Addition ☐ Remodel Finished Sq. Ft. 892
ccupancy: ☒ Single Family ☐ Multifamily-#Bldgs: _____ #Units _____
uel Type: ☒ Gas ☐ Oil ☐ Propane ☐ Wood ☐ Coal ☐ Heat Pum

WSEC CHAP.6 TABLE 6-2	Opt.1 ☐	Opt.2 ☐	Opt.3 ☐	Opt.4 ☐	Opt.5 ☐	Opt.6 ☐*	Opt.7 ☒*	CHAP 4/5 ☐/☐*
HEAT SYSTEM								
AFUE	78%	78%	88%	78%	74%	78%	78%	
HSPF	6.8	6.8	7.7	6.8	6.35	6.8	6.8	____
GLAZING								
Floor %	10%	12%	21%	21%	21%	25%	30%	____
U-Value	.70	.65	.75	.65	.60	.50	.45	
DOORS								
U-Value	0.40	0.40	0.40	0.40	0.40	0.40	0.40	____
R-Value	2.5	2.5	2.5	2.5	2.5	2.5	2.5	____
CEILINGS								
w/attics	R-30	R-30	R-30	R-30	R-30	R-38	R-30	____
vaulted	R-30	R-30	R-30	R-30	R-30	R-30	R-30	____
ABOVE GRADE WALLS								
	R-15	R-15	R-19	R-19	R-19	R-19	R-19	____
BELOW GRADE WALLS								
interior	R-15	R-15	R-19	R-19	R-19	R-19	R-19	____
exterior	R-10	R-10	R-10	R-10	R-10	R-10	R-10	____
FLOORS	R-19	R-19	R-19	R-19	R-19	R-25	R-25	____
LABS	R-10	R-10	R-10	R-10	R-10	R-10	R-10	____

* The following options are for buildings more than 2 stories: 0.45 max. fc glazing areas of 25% or less; 0.40 max. for glazing areas of 30% or less.

**Supporting documentation required.

CONDITIONED SQ.FT. 892 X GLAZING % 30 = 268 ☨ SF ALLOWED GLAZING

MAX. HEAT SYSTEM SIZE:
☐ WALL HEATERS: COND. SQ. FT. X 24 =
☒ DUCTED SYSTEM: COND. SQ. FT. X 27 = 24,084 BTUH OUTPUT

VAPOR RETARDERS:

FLOOR	☐ 4-mil Poly	☐ Face Stapled Backed Batts	☒ Ext. T&G Plywd.
WALLS	☐ 4-mil Poly	☐ Face Stapled Backed Batts	☒ PVA - Paint
CEILINGS	☐ 4-mil Poly	☐ Face Stapled Backed Batts	☒ PVA - Paint

VENTILATION SYSTEM

(Choose one)

☒ Integrated System w/ fresh air introduced into return-air duct. Whole house exhaust fan will be included. (yes/no)

☐ Fresh air port at each habitable room. Min. = net 4 sq. in. each. Whole house exhaust fan is required.

☐ Continously operated Heat Recovery System.

☐ Not Applicable. (For additions less than 500 Sq. Ft.)

GLAZING SCHEDULE

(B) ROOM	(C) WINDOW	(D) FRAME	(E) AIR	(F) GAS	(G) LoE	(H) U-VAL.	(I) AREA	(J) UA
RECREATION RM	A					.30	20.25	
"	A					.30	20.25	
"	B					.30	25.56	
"	B					.30	25.56	
"	C					.30	31.68	
"	C					.30	31.68	
"	D					.34	6.25	
"	E					.34	10.00	
~~"~~	~~F~~					~~.45~~	~~16.00~~	
CLOSET	G					.34	7.06	

GLAZING IN EXTERIOR DOORS

(A) FG.	(B) ROOM	DOOR SIZE	(C) GLAZING SIZE	(E) AIR	(F) GAS FILL	(G) LoE	(H) U-VAL	(I) GLASS AREA	(J) UA

SKYLIGHTS AND SKY WALLS

	RECREATON RM	H					.42	11.46	
	" "	H					.42	11.46	
	" "	H					.42	11.46	
	" "	H					.42	11.46	

~~240.13~~	
TOTAL 1	TOTAL 2

224.13

GLAZING % = $\frac{\text{TOTAL 1}}{\text{CONDITIONED AREA}}$ = 26.9 %

(OPTIONAL)

AVG. U-VALUE = $\frac{\text{UA TOTAL}}{\text{AREA TOTAL}}$ = $\frac{\text{TOTAL 2}}{\text{TOTAL 1}}$ = _____

INSTRUCTIONS FOR COMPLETING THE GLAZING SCHEDULE

IF ALL OF YOUR GLAZING IS NFRC CERTIFIED AND LABELED:

Complete columns (B), (C), (H), (I) and the GLAZING % calculation.

IF ANY OF YOUR GLAZING IS NOT NFRC CERTIFIED AND MANUFACTURED BY A SMALL BUSINESS OR IF YOUR GLAZING IS SITE BUILT:

C lete columns (A) through (I) and the GLAZING % calculation.
-Values contained in WSEC Table 10-6B in column (H) for non-tested manufactured glazing.
Use U-Values contained in WSEC Table 10-6A in column (H) for site built or custom glazing.
If any U-values exceed your compliance path in Table 6-1 or 6-2, you will also be required to complete column (J) and the AVG. U-VALUE calculation.
The average U-value cannot exceed those in Table 6-1 or 6-2.

9/22/95

CORRECTION NOTICE

CITY OF DES MOINES
BUILDING DEPARTMENT
805 S. 219th St.
Des Moines, WA 98198-6340

Bldg. Permit # 983910 Address: 25107 8TH PL S.

The following corrections are to be made to comply with City, State and/or Uniform Codes. After making corrections, call (206) 878-8626 for reinspection.

1. PROVIDE SOLID BLOCKING ON UPPER LEVEL SHEAR NAILING INSPECTION ONLY, AS PER ENGINEERINGS SPECS.
2. ROOF NAILING OK TO COVER. 1ST HALF ONLY. (EAST ½)
3. CALL FOR REINSPECTION

Date: 1-26-99 Building Inspector: [signature] Inspection Type: ~~SHEARWALL~~ UPPER ONLY ROOF NAILING

CORRECTION NOTICE

CITY OF DES MOINES
BUILDING DEPARTMENT
21630 11th Ave. S., Suite D
Des Moines, WA 98198-6398
(206) 870-7576 Fax: (206) 870-6544

Bldg. Permit # 983910 Address: 25107 8th PL So.

The following corrections are to be made to comply with City, State and/or Uniform Codes. After making corrections, call (206) 878-8626 for reinspection.

1. SEAL ALL PENETRATIONS IN GARAGE FIRE WALL & CEILING
2. INSULATE STAIRWAY ACCESS
3. INSTALL DOOR HARDWARE
4. NEED ELECTRICAL FINAL

Date: 5/28/99 Building Inspector: [signature] Inspection Type: FINAL

CORRECTION NOTICE

CITY OF DES MOINES
BUILDING DEPARTMENT
21630 11th Ave. S., Suite D
Des Moines, WA 98198-6398
(206) 870-7576 Fax: (206) 870-6544

Bldg. Permit # E98 3910 Address: 25107 8th Pl So.

The following corrections are to be made to comply with City, State and/or Uniform Codes. After making corrections, call (206) 878-8626 for reinspection.

1. Bond Water & Gas Lines with #4 Cu
2. Install Correct Lamps in Outside Fixtures
3. Call for Re-Inspection

Date: 5/28/99 Building Inspector: [signature] Inspection Type: Elect Final

RELEASE OF BOND

Building Permit No.: 983910

I have inspected the premises associated with this Building Permit, and hereby authorize the City Treasurer to release the bond or bonds itemized below.

Authorized by David Maresh, Eng. Insp. Date 10-11-99

Release Bond to the Order of: HEINZ PIENIAK

Date Receipted: 12/15/98

Receipt No.: 12411

Check No.:

Comments:

HEINZ PIENIAK
25107 8th Pl S.
DesMoines, WA 98198

Demolition Bond	$
Landscaping Bond	$
Land Clear/Grading	$
Plat Const. Bond	$
Prop. Protection Bond	$ 1000 00
Sidewalk Const. Bond	$
Street Cleaning Bond	$ 500 00
Temp. CO Permit	$
Other:	
	$
	$
	$
	$
	$
	$
Total Release:	$ 1500 00

OK Dave 7-22-99

Check Issue Date: Check Issued By:

Comments:

q:\forms\1031

COPY

RELEASE OF BOND

Building Permit No.: 983910

I have inspected the premises associated with this Building Permit, and hereby authorize the City Treasurer to release the bond or bonds itemized below.

Authorized by David Maresh, Eng. Insp. Date 10-11-99

Release Bond to the Order of: HEINZ PIENIAK

Date Receipted: 12/15/98

Receipt No.: 12411

Check No.:

Comments:

HEINZ PIENIAK
25107 8th Pl S.
DesMoines, WA 98198

Demolition Bond	$
Landscaping Bond	$
Land Clear/Grading	$
Plat Const. Bond	$
Prop. Protection Bond	$ 1000 00
Sidewalk Const. Bond	$
Street Cleaning Bond	$ 500 00
Temp. CO Permit	$
Other:	
	$
	$
	$
	$
	$
	$
Total Release:	$ 1500 00

OK Dave 7-22-99

Check Issue Date: Check Issued By:

Comments:

q:\forms\1031

COPY

DUPLICATE RECEIPT DUPLICATE RECEIPT

CITY OF DES MOINES
COMMUNITY DEVELOPMENT,
BUILDING, AND PUBLIC WORKS

21630 11TH AV S, SUITE D
DES MOINES, WA 98198
OFFICE HOURS ARE 8:00 - 4:30 M-F

REG-RECEIPT:02-0012411 C:12-15-1998
CASHIER ID:T 15:01:00 A:12-15-1998

1400 BUILDING PERMIT	$1,049.75
BP3910 OWNR:PIENIAK	
3010 STATE BLDG. CODE F	$4.50
BP3910 OWNR:PIENIAK	
2809 RIGHT OF WAY SURCH	$104.98
PIENIAK 983910	
3024 BONDS/STREET CLEAN	$500.00
PIENIAK 983910	
3025 BONDS/PROPERTY PRO	$1,000.00
PIENIAK 983910	
TOTAL DUE	$2,659.23

RECEIVED FROM:
PIENIAK CK#0446

CHECK	$2,659.23
TOTAL TENDERED	$2,659.23
CHANGE DUE	$0.00

CALL 870-7576 24 HOURS IN ADVANCE
TO SCHEDULE AN INSPECTION.

DUPLICATE RECEIPT DUPLICATE RECEIPT