Creative Engineering Options INC.

CEO

A firm practicing in the geosciences

PREPARED FOR
MR. HEINZ PIENIAK

GEOTECHNICAL ENGINEERING
STUDY
EMERGENCY BULKHEAD WALL REPAIR
25107 - 8TH PLACE SOUTH
DES MONIES, WASHINGTON

Glen Mann, P.E.
President

02-2389

April 2, 2002

Copyright Creative Engineering Options, Inc. April 2, 2002

5418 159th Place NE • Redmond, WA 98052 • (425) 883-6889 • FAX (425) 867-9664 • www.ceogeo.com

Creative Engineering Options INC.
CEO
A firm practicing in the geosciences

April 2, 2002 02-2389

Mr. Heinz Pieniak
c/o Dochnahl Construction, Inc.
16442 S.E. Renton - Issaquah Road
Renton, Washington 98059

Attention: Mr. Ron Nolten

Subject: **Geotechnical Engineering Study**
Emergency Bulkhead Wall Repair
25107 8th Place South
Des Moines, Washington

Dear Mr. Pieniak:

Introduction

As requested, this report summarizes the results of our limited geotechnical engineering study for the project. To the best of our understanding, the project incorporates the installation of a series of drilled-in-place Titan tie-back anchors to help restrain the existing laterally displaced, staged, pin-pile and timber lagging bulkhead walls. We proceeded with our services on the basis of Mr. Heinz Pieniak's February 13, 2002 written authorization.

The primary purposes of our study were to evaluate and characterize the shallow subsurface soil and groundwater conditions beneath the general area of the proposed emergency repair, and to supplement these data with geotechnical and geological information readily available in our library and files. Our limited site and data evaluation were used as a basis for formulation of geotechnical recommendations for design and construction of the drilled-in-place anchors, site preparation and earthwork operations, remedial fill placement, the sites'

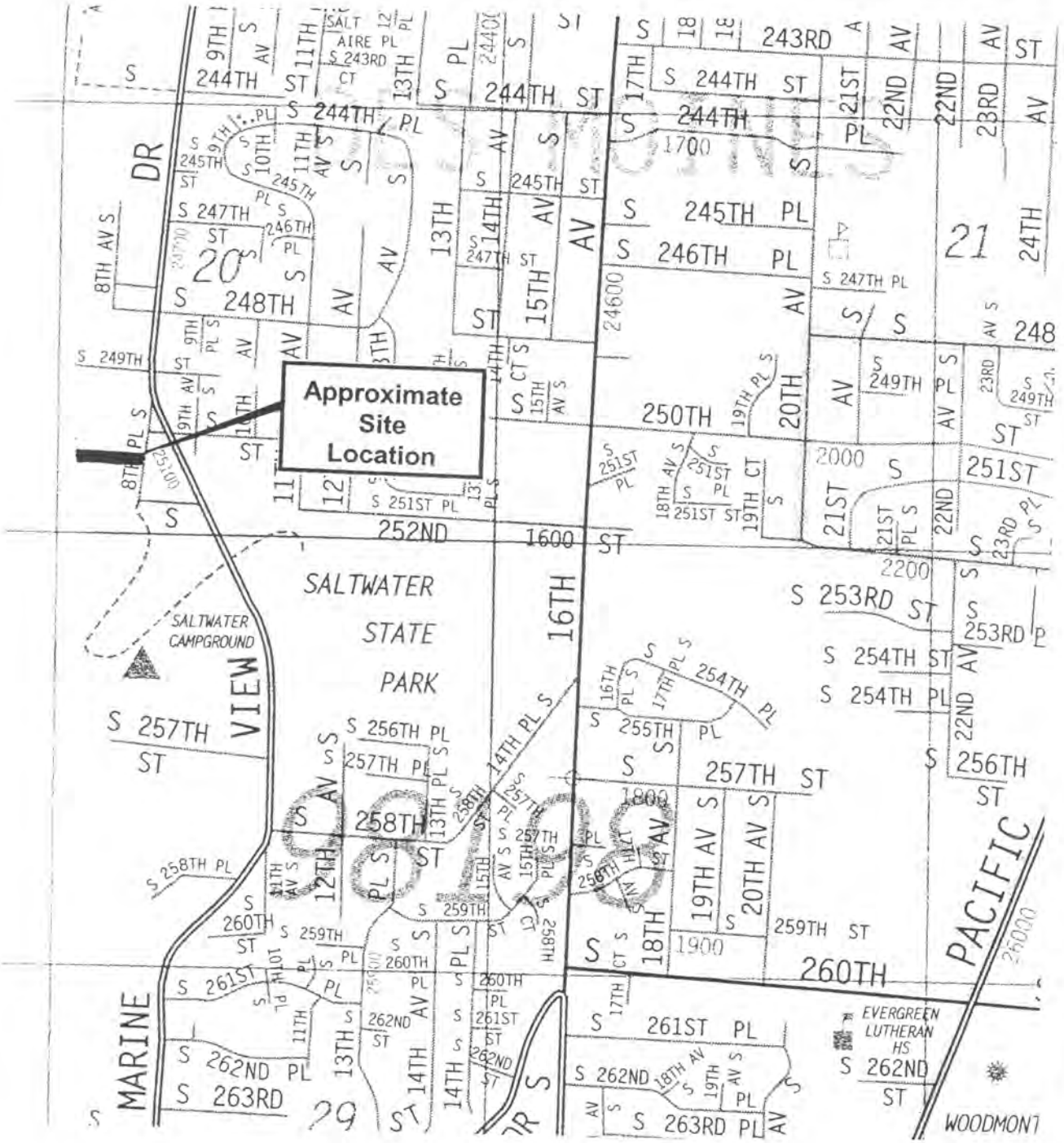

Reference: 2001 edition of Thomas Brothers King County Map number 715, grid A-4.

N

Creative Engineering Options INC CEO A Firm Practicing in the Geosciences	VICINITY MAP	Plate 1

Important Information About Your

Geotechnical Engineering Report

Subsurface problems are a principal cause of construction delays, cost overruns, claims, and disputes.

The following information is provided to help you manage your risks.

Geotechnical Services Are Performed for Specific Purposes, Persons, and Projects

Geotechnical engineers structure their services to meet the specific needs of their clients. A geotechnical engineering study conducted for a civil engineer may not fulfill the needs of a construction contractor or even another civil engineer. Because each geotechnical engineering study is unique, each geotechnical engineering report is unique, prepared *solely* for the client. *No one except you* should rely on your geotechnical engineering report without first conferring with the geotechnical engineer who prepared it. *And no one—not even you*—should apply the report for any purpose or project except the one originally contemplated.

Read the full report

Serious problems have occurred because those relying on a geotechnical engineering report did not read it all. Do not rely on an executive summary. Do not read selected elements only.

A Geotechnical Engineering Report Is Based on A Unique Set of Project-Specific Factors

Geotechnical engineers consider a number of unique, project-specific factors when establishing the scope of a study. Typical factors include: the client's goals, objectives, and risk management preferences; the general nature of the structure involved, its size, and configuration; the location of the structure on the site; and other planned or existing site improvements, such as access roads, parking lots, and underground utilities. Unless the geotechnical engineer who conducted the study specifically indicates otherwise, *do not rely on a geotechnical engineering report* that was:

- not prepared for you,
- not prepared for your project,
- not prepared for the specific site explored, or
- completed before important project changes were made.

Typical changes that can erode the reliability of an existing geotechnical engineering report include those that affect:

- the function of the proposed structure, as when it's changed from a parking garage to an office building, or from a light industrial plant to a refrigerated warehouse,
- elevation, configuration, location, orientation, or weight of the proposed structure,
- composition of the design team, or
- project ownership.

As a general rule, *always* inform your geotechnical engineer of project changes—even minor ones—and request an assessment of their impact. *Geotechnical engineers cannot accept responsibility or liability for problems that occur because their reports do not consider developments of which they were not informed.*

Subsurface Conditions Can Change

A geotechnical engineering report is based on conditions that existed at the time the study was performed. *Do not rely on a geotechnical engineering report* whose adequacy may have been affected by: the passage of time; by man-made events, such as construction on or adjacent to the site; or by natural events, such as floods, earthquakes, or groundwater fluctuations. *Always* contact the geotechnical engineer before applying the report to determine if it is still reliable. A minor amount of additional testing or analysis could prevent major problems.

Most Geotechnical Findings Are Professional Opinions

Site exploration identifies subsurface conditions *only* at those points where subsurface tests are conducted or samples are taken. Geotechnical engineers review field and laboratory data and then apply their professional judgment to render an *opinion* about subsurface conditions throughout the site. Actual subsurface conditions may differ—sometimes significantly—from those indicated in your report. Retaining the geotechnical engineer who developed your report to provide construction observation is the most effective method of managing the risks associated with unanticipated conditions.

A Report's Recommendations Are *Not* Final

Do not overrely on the construction recommendations included in your report. *Those recommendations are not final,* because geotechnical engineers develop them principally from judgment and opinion. Geotechnical engineers can finalize their recommendations only by observing actual subsurface conditions revealed during construction. *The geotechnical engineer who developed your report cannot assume responsibility or liability for the report's recommendations if that engineer does not perform construction observation.*

A Geotechnical Engineering Report Is Subject To Misinterpretation

Other design team members' misinterpretation of geotechnical engineering reports has resulted in costly problems. Lower that risk by having your geotechnical engineer confer with appropriate members of the design team after submitting the report. Also retain your geotechnical engineer to review pertinent elements of the design team's plans and specifications. Contractors can also misinterpret a geotechnical engineering report. Reduce that risk by having your geotechnical engineer participate in prebid and preconstruction conferences, and by providing construction observation.

Do Not Redraw the Engineer's Logs

Geotechnical engineers prepare final boring and testing logs based upon their interpretation of field logs and laboratory data. To prevent errors or omissions, the logs included in a geotechnical engineering report should *never* be redrawn for inclusion in architectural or other design drawings. Only photographic or electronic reproduction is acceptable, *but recognize that separating logs from the report can elevate risk.*

Give Contractors a Complete Report and Guidance

Some owners and design professionals mistakenly believe they can make contractors liable for unanticipated subsurface conditions by limiting what they provide for bid preparation. To help prevent costly problems, give contractors the complete geotechnical engineering report, *but* preface it with a clearly written letter of transmittal. In that letter, advise contractors that the report was not prepared for purposes of bid development and that the report's accuracy is limited; encourage them to confer with the geotechnical engineer who prepared the report (a modest fee may be required) and/or to conduct additional study to obtain the specific types of information they need or prefer. A prebid conference can also be valuable. *Be sure contractors have sufficient time* to perform additional study. Only then might you be in a position to give contractors the best information available to you, while requiring them to at least share some of the financial responsibilities stemming from unanticipated conditions.

Read Responsibility Provisions Closely

Some clients, design professionals, and contractors do not recognize that geotechnical engineering is far less exact than other engineering disciplines. This lack of understanding has created unrealistic expectations that have led to disappointments, claims, and disputes. To help reduce such risks, geotechnical engineers commonly include a variety of explanatory provisions in their reports. Sometimes labeled "limitations", many of these provisions indicate where geotechnical engineers responsibilities begin and end, to help others recognize their own responsibilities and risks. *Read these provisions closely.* Ask questions. Your geotechnical engineer should respond fully and frankly.

Geoenvironmental Concerns Are Not Covered

The equipment, techniques, and personnel used to perform a *geoenvironmental* study differ significantly from those used to perform a *geotechnical* study. For that reason, a geotechnical engineering report does not usually relate any geoenvironmental findings, conclusions, or recommendations; e.g., about the likelihood of encountering underground storage tanks or regulated contaminants. *Unanticipated environmental problems have led to numerous project failures.* If you have not yet obtained your own geoenvironmental information, ask your geotechnical consultant for risk management guidance. *Do not rely on an environmental report prepared for someone else.*

Rely on Your Geotechnical Engineer for Additional Assistance

Membership in ASFE exposes geotechnical engineers to a wide array of risk management techniques that can be of genuine benefit for everyone involved with a construction project. Confer with your ASFE-member geotechnical engineer for more information.

ASFE

8811 Colesville Road Suite G106 Silver Spring, MD 20910
Telephone: 301-565-2733 Facsimile: 301-589-2017
email: info@asfe.org www.asfe.org

Copyright 2000 by ASFE, Inc. Unless ASFE grants written permission to do so, duplication of this document by any means whatsoever is expressly prohibited. Re-use of the wording in this document, in whole or in part, also is expressly prohibited, and may be done only with the express permission of ASFE or for purposes of review or scholarly research.

UGER1000.10M

susceptibility to liquefaction under seismic conditions, stability of site slopes, and development of wall drainage and construction area erosion control measures.

The site is located approximately as shown on the Vicinity Map, Plate 1. The general layout of the proposed project is presented on the attached Site Sketch, Plate 2. This site sketch also shows the approximate locations and extent of the proposed anchors.

This report addresses the geotechnical aspects of site development only. It does not address any environmental, wetland or biological aspects of the site conditions, such as the potential presence of toxic or hazardous conditions or buried tanks, or of wetlands. If the environmental aspects of site development need to be addressed, it should be done by a suitably qualified expert under a separate contract.

Project Description

As we understand the current situation from our site observations the previously constructed [approximately 1994 and 1996-1997] four tier bulkhead wall consists of a series of driven-in-place steel pin-piles and pressure treated timber lagging planks. The lower tier is "anchored" to the tier above with a series of threaded steel rods, and these rods are "fixed" to the upper pin-piles. The upper two tiers are "tied-back" to a concrete deadman anchor buried in the lawn area well behind the top tier of the wall. A portion of the space behind these walls was also backfilled with lightweight Geofoam material in an effort to reduce the loads applied to the slope and the walls.

The lower tier of the wall recently suffered a partial "failure" and was displaced outwards and downwards resulting in relatively severe bending of several of the pin-piles, and up to about twelve (12) inches of settlement of the walls' backfill. This settlement has partially to completely exposed the threaded rods between the two lower tiers. The displacement of the lower tier has resulted in a significant distortion and displacement of the second tier. If not quickly restrained these two lower tiers of the wall will begin to "drag" the upper tiers down the slope, a process that will result in a complete wall failure.

Scope of Services

Our scope of services, developed from our discussions with you and the contractors' representatives, is designed to develop as much site information as possible within the necessary time and budgetary constraints. You should be aware that this property is located within an area of "steep" slopes, slopes with a gradient of greater than 40%, and one generally considered to be a "landslide and erosion hazard." More specifically, our scope includes the following:

- Performance of a brief site visit to visually evaluate the damaged walls and the slope condition, and to assess the exposed site soil conditions,
- Performance of a limited review of geotechnical and geological data readily available in our library and files, including the earlier work on the original walls' design and construction, to help evaluate and characterize the site soil and groundwater conditions,
- Provision of geotechnical recommendations for the appropriate site earthwork operations for preparation of the installation of a series of drilled-in-place anchors to restrain the existing damaged wall including, but not necessarily limited to, overexcavation, and the removal and disposal of in-situ soil,
- Performance of geotechnical analyses to act as a basis for design of drilled-in-place Titan anchors, including anchor rod type, an allowable anchor capacity, anchor length, angle of inclination, and vertical and horizontal anchor spacings,
- Provision of appropriate geotechnical details for the recommended anchor installation and proof load testing program to verify anchor capacities,
- Evaluation of the global stability of the anchored wall system in the static and dynamic [earthquake] conditions,

- Provision of geotechnical recommendations for the emergency repair areas drainage and erosion control measures, and

- Provision of five copies of a final written report summarizing the above information,

This report has been prepared for specific application to the proposed emergency bulkhead wall repair project located at 25107 - 8th Place South in Des Monies, King County, Washington, only and is for the exclusive use of Mr. Heinz Pieniak and his other representatives, consultants and contractors. No other warranty, expressed or implied, is made. We recommend that this report, in its entirety, be made readily available for the contractor(s) information and estimating purposes. However, this report should not be considered the sole source of geotechnical data, and provision of this report should not relieve the contractor from the responsibility for making his own site study. Our recommendations, based on our data review, site observations, and engineering analyses, are presented following the discussion of site conditions.

SITE CONDITIONS

Surface

The site is located at a street address of 25107 - 8th Place South, about one hundred (100) feet south of the junction with South 251st Street, in Des Moines, King County, Washington approximately as shown on Plate 1, Vicinity Map. The home is bounded to the north, south and, across the street, to the east by existing established single family residential development. To the west, at the bottom of the relatively steep slope, is Puget Sound.

The eastern portion of the property is essentially flat and level and comprises landscaped [front] yard area and a concrete driveway. The residence is situated approximately in the center of the property. The level portion of the rear yard

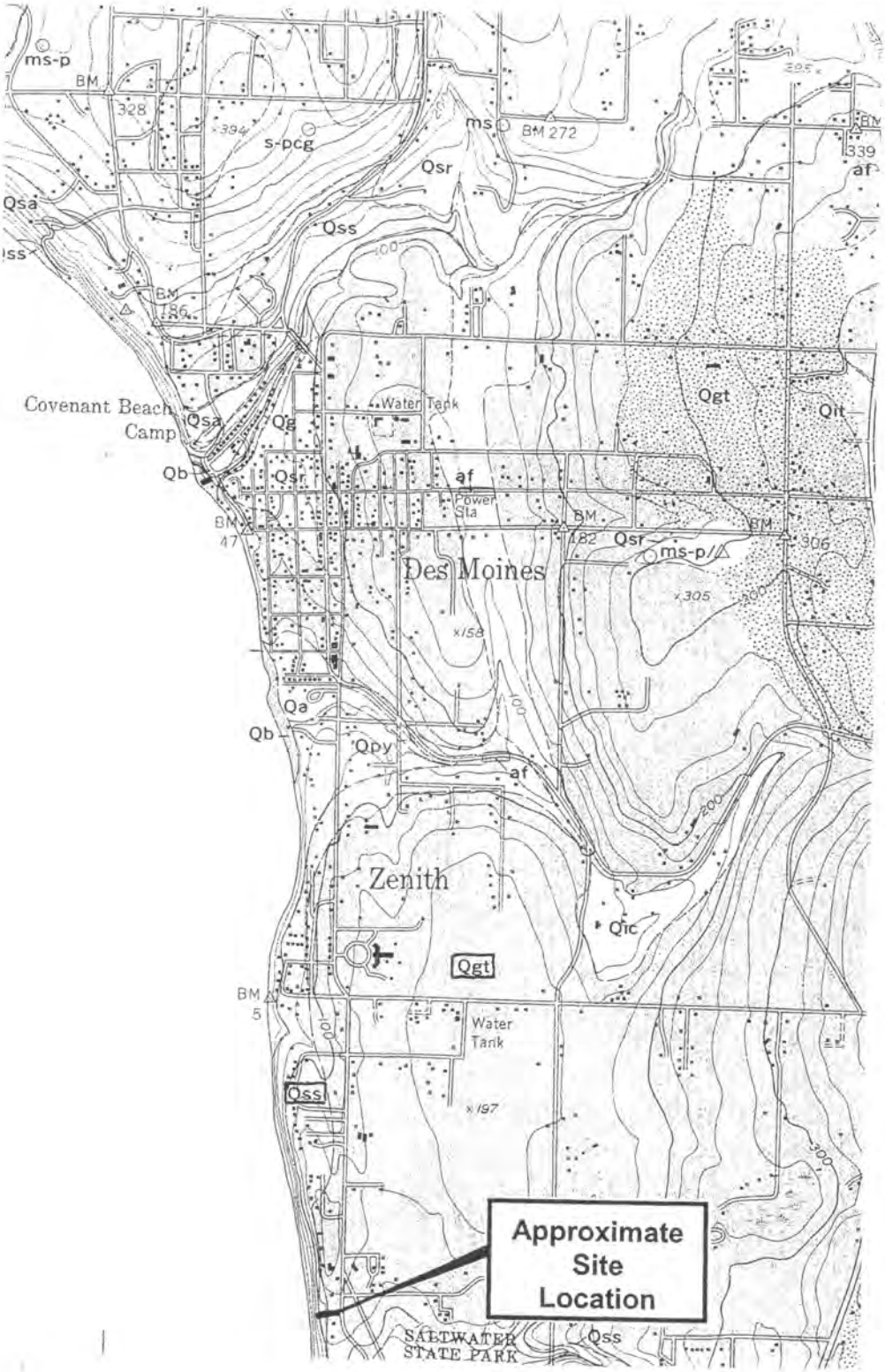

Reference: Geologic Map of the Des Moines Quadrangle, Washington, by Waldron, H. H.; U.S.G.S. 1962.

99-2034 / 5.25.99

Creative Engineering Options INC.
CEO
A Firm Practicing in the Geosciences

LOCAL GEOLOGY

Plate
3

extends out to the crest of the bluff slope for a distance of about thirty (30) to forty (40) feet and is landscaped. The crest of the bluff slope is restrained and protected by a series of four tiered pin-pile and timber lagging walls, each about four to six feet high. These walls extend across virtually the entire width of the property. The areas between each tier of the wall are also landscaped. Below the toe of the lower tier of the wall the slope extends down for more than one hundred (100) feet to the beach along the edge of Puget Sound. This slope supports a heavy low ground cover comprising predominantly of berry vines, grass, ferns and other miscellaneous vegetation. This slope, and adjacent slopes to the north and south, also supports a variety of older and relatively mature evergreen and deciduous trees, some with large trunk diameters.

We observed no visible evidence of any standing surficial water on this site at the time of our visual evaluation.

Subsurface

General: we did not conduct a site specific subsurface exploration of this site. Instead, in order to evaluate the in-place soil and groundwater conditions we conducted a limited visual evaluation of the soil exposures adjacent to, and below, the tiered walls. The following is a generalized description of the areal geology, and the subsurface conditions observed in our field evaluation.

Local Geology: In an effort to approximately determine the general origin and nature of the in-place soils we conducted a brief evaluation of geological data available in our library at the time of writing. In particular, according to the Geologic Map of the Des Moines Quadrangle, Washington [Waldron, H. H., U.S.G.S. 1962] the upland portion of the site area is underlain by glacial till [Qgt] which typically comprises a poorly sorted but very compact non-stratified mixture of gravel, sand, silt, and clay and also contains occasional boulders. This description is reasonably compatible with the observed on-site upland soils. The lower portion of the bluff slope is described as comprising the Salmon Springs Deposit [Qss]. This unit typically comprises dense to very dense sand and pebbles, partially cemented in some areas, and with local lenses of till, silt and clay. This local geology is pictorially depicted on Plate 3, attached, for your information.

Additionally, according to the Coastal Zone Atlas of King County, Washington [Plate KI-8/9] almost the entire waterfront area along this portion of the western shoreline

is classified as "unstable." This is, according to the atlas, primarily due to tidal and current related undercutting along the toe of the steep bluff slope which removes vertical support thus allowing relatively thin surficial "slabs" of soil to collapse under their own weight and slough off the slope face. This activity is considered to occur predominantly on the lower portion of the bluff slope.

Soil Conditions: In general, based on our visual observations, the bulk of the site is underlain by medium dense to very dense, silty to clean fine to coarse sands containing generally small, though varied, amounts of rounded gravel, and medium stiff to hard sandy silts. We classified these shallow soils in general accordance with the Unified Soil Classification System (USCS) as either a SM, a SP, or an ML, depending on the fines content. In our opinion there is also still a thin surficial layer of silty sand "fill" material overlying the slope surface beneath parts of the wall alignment and on the slope immediately below the tow of the lower tier of the wall. We believe this "fill", likely resulting from the original construction of the residence, to be loose and typically wet in-place and we have classified it as a silty sand SM by the USGS.

Soil Behavior: In general, the shallow surficial "fill" soil is considered only marginally capable of providing any vertical or lateral support to the wall structure and its backfill. The majority of the deeper soil, predominantly a dense silty sand or sandy silt, is capable of developing a significant degree of soil bearing and lends itself to the employment of a pin-pile wall support system. This material is also considered to be capable of developing a substantial degree of anchor adhesion and, thus, high anchor load carrying capacity.

The shallow in-situ soils typically include more than thirty (30) to forty (40) percent soil fines (silt and clay sized particles passing the number 200 mesh sieve). They are because of the fines content considered to be highly "moisture sensitive." This means they are likely to become difficult, if not impossible, to work [or compact] when wet, and that they are likely to deteriorate rapidly under even light pedestrian construction traffic. {The contractor should be clearly aware of this and should be prepared to cover the working areas of wet soil with an imported granular material.}

Because of the fines content in the majority of the shallow in-place silty sand and sandy silt soil they should be considered relatively poorly draining materials. Where the density increases these materials should be expected to be essentially impermeable.

Groundwater

We did not encounter any visible evidence of an established groundwater level, or of any established groundwater seepage at the time of our field visit. Given the elevation of the property it is our professional opinion that the local groundwater level, that of Puget Sound to the west, is estimated to be more than one hundred (100) feet below the elevation of the walls and the area of emergency repair.

It has been our experience, however, that groundwater and seepage levels should not be considered static. Typically, fluctuations in the levels and rates of flow can, and often do, occur on a seasonal basis, after periods of heavy or sustained precipitation, or from surface flow from elsewhere on the property or its surroundings.

Any potential contractor should be aware of the possible presence of periodic and temporary shallow water beneath the general construction area of this site, and the potential risks associated with the presence of water. He should take appropriate measures in his bid by including a contingency in his budget and schedule to accommodate the potential need to deal with groundwater and/or seepage inflow during construction.

DISCUSSION AND RECOMMENDATIONS

General

Based on the results of our limited study, it is our professional opinion that it is geotechnically feasible to develop more than adequate wall restraint by the installation of a series of drilled-in-place Titan anchors. These anchors, particularly when connected to a steel waler beam extending across the faces of the existing pin-piles, should be more than capable of preventing any future wall distortion or lateral movement.

After the new anchors have been installed, proof tested, and locked off against the waler beams, the areas behind the walls where settlement resulting from wall

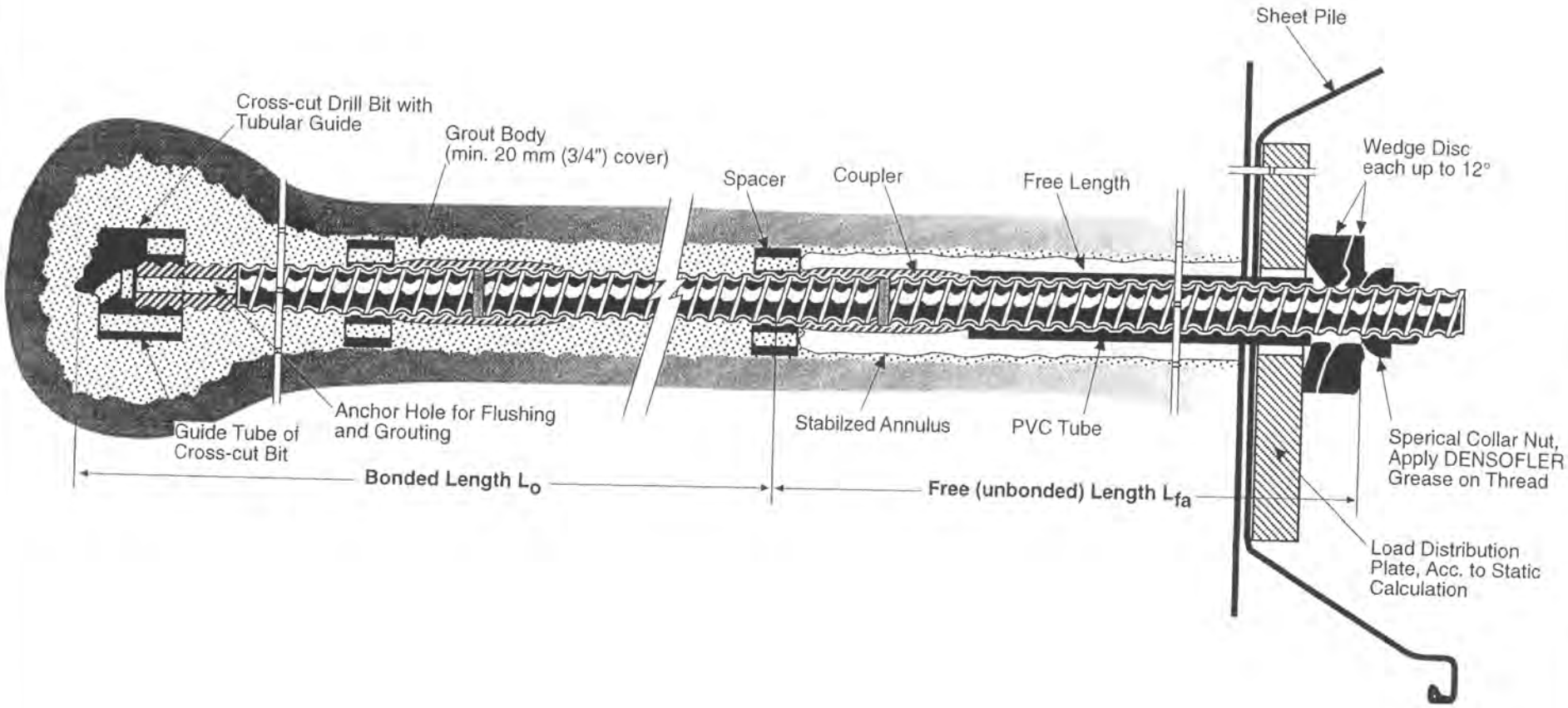

CEO Creative Engineering Options INC. A Firm Practing in the Geosciences	TYPICAL TITAN ANCHOR DETAIL	Plate 4

movement has lowered the backfill surface may be refilled. We recommend that the landscaping materials first be removed and stockpiled then any necessary additional lightweight Geofoam block material should be installed to raise the wall backfill grades. The surface of the Geofoam may then be covered with a layer of geotextile and the landscaping materials replaced.

The in-place soils beneath this site are generally granular, and are relatively dense in-situ. There is also no permanent shallow water level that could surge and saturate the soil. Because of this, and taking the site soils' performance during the February 2001 Magnitude 6.8 earthquake into account, it is our opinion that the properly developed and maintained site is unlikely to be susceptible to any significant degree of liquefaction under even relatively severe earthquake conditions. Similarly, it is our opinion that this site is unlikely to suffer any significant liquefaction related settlement under earthquake conditions.

It should also be clearly understood that a substantial portion of the soils are considered to be highly "moisture sensitive" and subject to rapid disturbance and deterioration when wet. Thus, if these soils become wet it is probable that they will need to be overexcavated, removed from the site and disposed then replaced with an imported granular compactible material.

The sloping site is, as mentioned earlier, underlain at relatively shallow depth by a firm and competent native silty sand and/or sandy silt soil. Furthermore, though it appears possible that a temporary "perched" local groundwater level could occur at shallow depth, there is no apparent shallow groundwater level beneath the site. Whilst we found virtually no visible evidence of any localized erosional damage or shallow sloughing, we did note the presence of several "old" shallow landslide failures along the bluff slope to the north and south of this site. [We also understand that the pin-pile walls were constructed across a landslide scarp resulting from a landslide in about 1994.]

In spite of this neighboring landslide evidence, based on our computer analysis it is our professional opinion that this slope area is stable in its existing and post repair configuration under static and dynamic conditions. On the basis of our analyses, and providing the recommendations presented in this report are closely followed, it is our professional opinion that the site and anchored bulkhead walls should be expected to remain stable in their post repair configuration under static and dynamic conditions.

Also of considerable importance in the development of this property is the need to install a competent and functioning wall drainage system. Given the possibility of surface water infiltration in the area upgrade of the walls we strongly recommend employing an extension of the existing wall drain system. We also recommend that the repaired walls NOT be subject to any irrigation system watering since this not only saturates the wall backfill [even the Geofoam blocks] but the water adds weight to the structure and supporting soil thereby reducing the soils ability to support the applied loads.

These and other geotechnical aspects of the project are discussed in more detail in the following sections of this report.

Site Preparation

Stripping and Clearing: The area of the slope surface along the base of the lower tier of the existing bulkhead wall will need to be stripped of any standing vegetation for a distance of about five to six feet downslope from the base of the lower tier of the wall. The stripped vegetation should be removed from the site and disposed.

Earthwork: As indicated earlier, we do not anticipate the need for any significant or extensive excavation work in the proposed repair. The only potential excavation would be in order to provide a relatively small and confined flat and level space for the placement of the man-portable anchor drill. We recommend that any soil excavated for this purpose be removed from the slope surface and either disposed off site, or stockpiled for later reuse on the rear yard area above the upper tier of the wall.

Wall Backfilling: We do not anticipate that any significant filling or backfilling will be required as part of this emergency repair. After the walls have been anchored-in-place the surficial landscaping materials may be hand excavated and removed to expose either the underlying soil or the lightweight Geofoam backfill materials. We recommend that this operation be carried out in segments of about sixteen (16) feet at a time. This will allow for the excavated landscaping materials to be temporarily stockpiled on the adjacent backfill surface.

After this removal of landscaping materials has been accomplished in each segment any supplemental Geofoam block backfill may then be placed. We

Schematic Only - Not to Scale
Dimensions as indicated - for informational purposes only.]

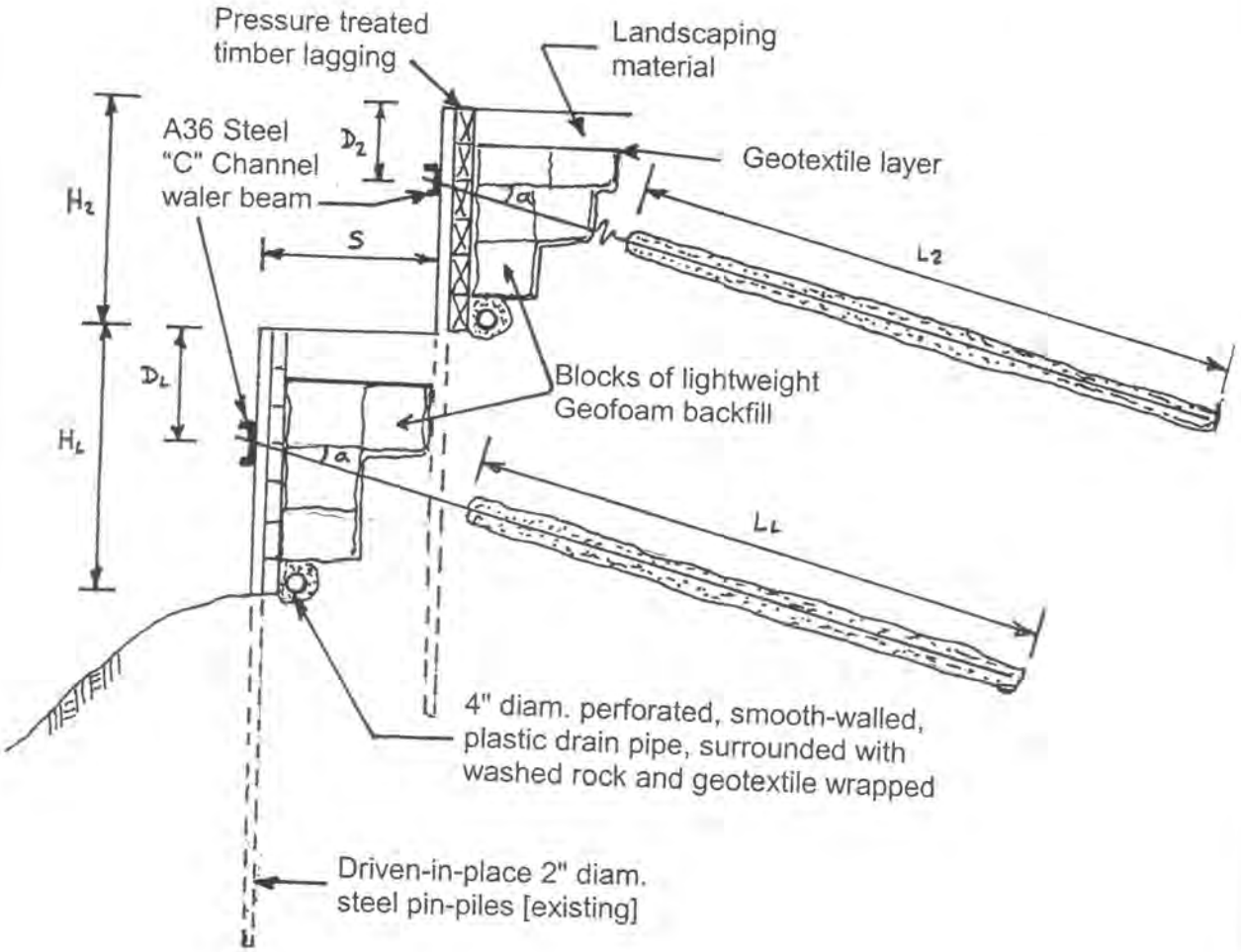

NOTES:

■ Maximum height of lower tier wall, H_L	=	7 feet
■ Maximum height of second tier wall, H_2	=	6 feet
■ Setback distance between two lower tier walls, S	=	4 feet
■ Depth to anchor head in lower tier wall, D_L	=	3 feet
■ Depth to anchor head in second tier wall, D_2	=	2 feet
■ Angle of anchor inclination down from horizontal, a	=	15 degrees
■ Length of grouted load carrying lower anchor, L_L	=	18 feet
■ Total length of lower tier anchor	=	21 feet
■ Length of grouted load carrying second tier anchor, L_2	=	21 feet
■ Total length of lower tier anchor	=	25 feet

Creative Engineering Options INC.
CEO
A Firm Practicing in the Geosciences

Typical Anchored Wall Section

Plate 5

estimate that the Geofoam blocks may need to be cut "to fit" spaces developed by the previous wall movement. The new Geofoam should be firmly set in-place so that the voids are adequately backfilled, but should be installed in a manner that allows for the replacement of sufficient landscaping material to "grow" new vegetative matter. For this purpose we recommend using an ASTM C-578 Type I Geofoam block material.

Drilled-in-Place Titan Anchors

General: As mentioned earlier in this report we recommend that the damaged wall be provided with additional lateral restraint and that this restraint should consist of drilled-in-place Titan anchors. These anchors should be extended back into the firm and competent "native" soils to develop adequate anchor adhesion and, thus, adequate load capacity. After installation, and time for the anchor grout to "set up" we recommend that the anchors be prof tested to verify their capacity and to determine if any "creep" in the anchor is occurring. After proof loading the anchors will be locked off against a steel waler beam, probably consisting of a steel "C" channel or, possibly, a pair of small wide flange members. The following paragraphs provide a more detailed description of the anchor system and where it is recommended.

Drilled-in-Place Titan Anchors: In an effort to provide lateral restraint across the exposed face of the existing rockery without having to remove the rockery structure or to underpin the existing driveway, we recommend the use of a series of drilled-in-place "Titan" anchors. These anchors comprise a hollow, 30/11, coarse threaded, Dwyidag rod fitted with a carbide tipped cutting bit which is rotated into the ground with a man-portable hydraulic drilling machine.

As the rods are inserted into the ground additional segments are added using a threaded steel coupler. When the appropriate anchor length has been installed the remaining loose soil particles, or cuttings, are flushed out with compressed air to create a "clean" anchor hole.

After flushing the anchor hole a concrete grout is pumped through the hollow anchor rod under a low to moderate pressure. The grout is "forced" out of the open end of the anchor rod and then fills the drilled void space around the end of the rods and then flows back along the exterior of the anchor rod and fills the surrounding void space back to near the head of the anchor. When the anchor

grout "sets up" it creates a firm bond between the steel rod and the grout and the grout and the surrounding soil. Sufficient steel anchor rod is left protruding from the face of the rock wall to allow for the installation of the steel reinforcement and the shotcrete wall as well as the performance of anchor proof load. We have provided a typical Titan anchor detail for your information on Plate 4.

We anticipate that anchors will be required to support the lower tow tiers of the wall, and the southern end of the second tier from the top where several pin-piles exhibit some bending. These anchors will be installed in a single row along each tier of the wall. If feasible, we recommend that the anchors in the lower tier be offset from those in the tier above to avoid any potential "interference" in load carrying capability. For informational purposes, we have provided a pictorial depiction of the anchored wall section on Plate 5.

Anchor Design Parameters: Where the anchors are to be used to generate supplemental lateral restraint to the damaged wall we recommend they be designed in accordance with the following parameters:

■ Maximum estimated wall height [in lower tier]	=	7 feet
■ Maximum recommended center-to-center anchor spacing	=	18 feet
■ Maximum estimated applied lateral soil pressure	=	340 pounds per linear foot of wall
■ Maximum allowable anchor shaft adhesion	=	1.5 ksf
■ Maximum estimated anchor loading [includes a 1.5 factor of safety]	=	24 kips
■ Recommended "permanent" anchor rod type	=	30/11
■ Manufacturers' maximum allowable *permanent* anchor load capacity	=	43 kips

- Minimum recommended length of loaded anchor shaft = 18 feet
- Minimum estimated total anchor length = 21 feet
- Depth from top of wall to anchor head [for wall of more than six feet in height] = 3 feet
- Minimum recommended length of loaded anchor shaft in second tier of wall = 21 feet
- Minimum estimated total anchor length in second tier of the wall = 25 feet
- Depth from top of wall to anchor head [for wall of less than six feet in height] = 2 feet
- Angle of anchor installation [measured down from the horizontal] = 15 degrees
- Estimated minimum factor of safety [maximum allowable load divided by the maximum applied load] = 1.79
- Maximum moment in pile = 29.52 kip-feet
- Location of maximum moment in pile [measured down from top-of-pile] = 6.5 feet
- Maximum estimated vertical load component applied to pin-piles = 3.6 kips
- Allowable axial capacity of pin-pile = 4 kips

Anchor Installation: Because these anchors are drilled into the ground beneath and behind the existing bulkhead wall it is not possible to observe them. However, it is of considerable assistance to periodically observe the drilling operation since this provides an opportunity to note the rate of cutter head

penetration (indicative of the soil composition and density) and to observe the soil fine and cuttings returned from the anchor hole. In our opinion this is of considerable help in determining the location of firm and competent "native" soils along the installed anchor length, and in verifying that the design tip location is appropriate.

Anchor Load Testing: Because these anchors are installed below ground and are not visible, and because they are required to restrain an existing damaged structure (the bulkhead wall), we recommend that each anchor be verification tested. This allows us to determine that the allowable design capacity can be achieved by loading the anchor to 130% of the design load. The verification test program is outlined in more detail in Appendix A to this report.

Our field representative should monitor the performance of the verification tests and record the anchor movement at each load increment. In our experience we have found that the tested anchor capacity is usually considerably greater than the computed anchor capacity and, thus, develops a much larger factor of safety. On completion of the verification tests we will provide you, the contractor, and the City of Des Moines, with copies of the tabulated test data.

In addition to the verification testing we also recommend that one anchor, randomly selected by the geotechnical engineer, be tested to 200% of the allowable design load capacity. As with the verification tests, we will provide a tabulation of the test results for your records.

Anchor Lock Off: After the anchors have been successfully tested and the load testing devices removed, the steel load spreading plate (discussed below) should be slipped over the end of the anchor rod and placed firmly against the shotcrete facing. Then the locking nut should be threaded onto the anchor rod and tightened down by hand. Once the nut is firm against the load spreader plate it should be further tightened with a short, approximately two foot long, wrench. The nut should be tightened down to the point where no additional tightening can be achieved by hand without the use of a pry bar. At this point the anchor is considered to be "locked off."

IT IS CRITICAL THAT NO ANCHOR LOCK NUT IS TIGHTENED WITH THE USE OF A PRY BAR!

Load Spreader Plate: In order to help transfer the anchor loads to the waler beam and wall we recommend the use of a steel load spreader plate. This plate should be about twelve (12) inches square and at least one inch thick, and should be of A52 steel composition. A hole should be predrilled or precut approximately through the center of the plate to allow for the anchor head to pass freely through. Thus, the hole should have a minimum diameter of about two inches. When installed over the free end of the anchor rod the plate is set down directly against the waler beam. After load testing, the shaped steel washer and lock nut are placed on the end of the anchor and the nut is tightened down until the washer and nut are in close and firm contact with the plate. After the anchor is "locked off" the edges of the load spreader plate may be spot welded to the face of the waler beam to help prevent any possible plate movement of rotation under load.

Waler Beams: In order to help transfer the loads presently applied to the rear of the existing bulkhead walls to the anchors it will be necessary to employ a "waler beam" system. We have had a considerable degree of success in using either a "C" channel or pairs of small wide flange members for this purpose on numerous recent anchored wall systems. We recommend the project structural engineer determine the most practical and economical waler beam system for these walls. The only point of concern is that, regardless of the final selection, the waler beam must be capable of spanning a distance of eighteen (18) feet without undergoing any significant bending under the maximum applied load.

After the anchors have been drilled and grouted-in-place the waler beams may be raised into place, one above and one below the anchors for the wide flange members or at the anchor head locations for the steel "C" channel waler. The waler beam will probably require some form of "prop" be used to keep it in-place whilst the steel load spreader plates are set over the anchor rods and are spot welded in-place. We recommend that the load spreader plates be spot welded where the plate perimeter is in contact with the waler beam. In our opinion, a one inch long 3/8-inch fillet weld should be adequate, but we recommend the project structural engineer evaluate and verify this choice.

Seismic Risk

While we did not perform a detailed seismic risk analysis for this project, it is clear that earthquake ground motion response is a particularly important factor and that it should be carefully considered in structural design. Historically, the Puget Sound

Region has been subjected to frequent earthquakes of moderate intensity, and is designated in the Uniform Building Code as Seismic Zone 3. Two earthquakes that resulted in significant damage occurred in 1949 near Olympia, and in 1965 near Seattle. The April 3, 1949 earthquake is the largest recorded earthquake in the region, reaching a magnitude of 7.1. It was felt over 150,000 square miles, resulting in $25 million in damages, eight (8) deaths and many injuries. The April 29, 1965 earthquake of magnitude 6.5 was felt over 130,000 square miles, and resulted in widespread damage in the Seattle area. The area was also subjected to a Magnitude 5.0 earthquake during January 1995 and a 5.4 earthquake in May of 1996, and more recently a 5.9 earthquake. Additionally, the site (and local area) was subject to a Magnitude 6.8 earthquake on February 28, 2001.

Based on seismic risk analyses we have performed for similar sites in the Puget Sound region, considering the generally firm nature of the majority of the in-situ materials, and using the criteria contained in the City of Seattle Directors Rule 3-93 (the current state of the practice in this area for unsophisticated seismic analyses), and using the initial "rough" data from the most recent earthquake, we estimate that the design peak horizontal ground acceleration at the site should be considered to be on the order of the following:

- Minimum lateral acceleration = 0.20g

Approximate acceleration levels are only estimatable at this time for the state of practice due to complexities of the area that could include focusing and other complex concepts.

Figure 16.2 of the 1997 edition of the Uniform Building Code (UBC) also indicates that the site is located within the seismic area designated as Seismic Zone 3. For this zone the UBC indicates in Table 16-I that the site has the following zone factor:

- 1997 UBC Seismic Zone factor, Z = 0.30

Based on our evaluation of this site it is also our professional opinion that the soil beneath this site generally fall into what the UBC describes as a "stiff soil" profile. This is a material where the Standard Penetration Test N-values typically range

between 15 and 50 per foot. Thus, according to Table 16-J of the 1997 UBC the site is considered to have the following profile designation:

- 1997 UBC "stiff" soil profile = S_C

According to Tables 16-Q and 16-R the following seismic design coefficients should also be used:

- 1997 UBC Seismic coefficient C_a = 0.33
- 1997 UBC Seismic coefficient C_v = 0.45

Liquefaction

Based on the observed soil conditions, given the generally increasing density observed with depth, the partial cementation of some of the in-situ soils, and the lack of an established shallow water level that might be capable of surging and saturating the shallow soil, these soil do not appear to us to be susceptible to, or at any significant degree of risk of, liquefaction during an earthquake. In our opinion the risk of liquefaction, and liquefaction related settlement, may be considered low to negligible and does not in our professional opinion pose a threat to the emergency construction process or the repaired wall structure.

Slope Stability

General: As part of our work on this project we also evaluated the general stability of the sites' western bluff slope, though with emphasis on only the upper portion of the slope. From our visual examination of the soils exposed across the face of the site slope and on the surrounding properties, and our geological data review, it is believed likely that the bulk of the materials beneath the site slope comprise either dense to very dense silty sands and sands or sandy silts. The following paragraphs provide a more detailed summary of our stability evaluation.

Visual Slope Evaluation: Our representative conducted a visual evaluation of the pedestrian reachable area of the site slope immediately below the toe of the lower stage of the tiered bulkhead wall, and by observing the steeper portions of

the lower beachfront slope from the beach and from photographs of the slope. The primary purpose of this visual evaluation was to attempt to find visible evidence of any recent surficial sloughing, erosional damage or deep seated failure.

Our visual evaluation provided no evidence of any visible recent localized erosional damage across the upper bluff slope. Similarly, with the exception of some localized "creep" movement of the shallow soils along and beneath the toe of the tiered bulkhead wall, we did not observe any visible evidence of either shallow or deep seated landslide activity on this slope. However, we did note that there have been several recent landslides on neighboring slopes in this general area indicating that there is ongoing landslide activity along this bluff slope, though much of the activity appears to be on the lower and steeper [near vertical] portions of the slope. As mentioned, we did observe that the soils along the toe of the bulkhead wall exhibited the appearance of creep activity and that some of the soils in front of the wall appear to have suffered some shallow localized sloughing. We also understand that the existing pin-pile wall was installed as a repair of an earlier landslide on this site in 1994.

Computer Analysis: We also conducted an analysis of the approximate anchored wall and slope configuration based on a combination of the available topographic data and a series of hand measurements. Based on the apparently existing subsurface soil conditions, and from our visual site observations, we estimate that there are about two major soil strata forming and underlying the upper portion of this site slope in the general proximity of the anchored walls. Then, from our initial back-analyses (determining an approximately 1.0 factor of safety under dynamic conditions) we assigned these soil the following tabulated parameters:

Soil Description	USCS Symbol	Unit Weight (pcf)	Friction Angle (phi)	Cohesion (psf)
Loose silty SAND (Fill)	SM	120	30	0
Dense silty SAND	SM	128	40	250 [(a)]

(a) This cohesion value was used to approximately model the soils' cementation.

With these soil parameters, and the general upper slope and anchored wall configuration developed along an imaginary geometric profile, indicated as A - A' on the Site Sketch, Plate 2, we conducted a computerized analysis of the upper slopes' stability using the SLOPE/W finite element program developed by GeoSlope International of Canada.

We analyzed a total of seven hundred and twenty-six (726) potential failure surfaces in an effort to find the potentially "critical" failure surface. That is, the surface with the lowest factor of safety for the upper slope. As indicated earlier in this report we used a horizontal acceleration of 0.20g in our dynamic (earthquake) analysis. It is also critical to understand that the anchored bulkhead wall does not stabilize the entire slope, only that portion it restrains.

As pointed out earlier, our initial analysis was to verify that with the assumed soil parameters we would develop a factor of safety of about 1.0, a factor that clearly exists since the slope is in-place and was not apparently disturbed or damaged by the recent Magnitude 6.8 earthquake. We computed a minimum factor of safety of 1.012 under dynamic conditions from this back-analysis. We then reanalyzed the profile under static conditions to determine the factor of safety of the existing wall system. Then, we reanalyzed for the static and dynamic conditions after adding in the tie-back anchors. The computed factors of safety are presented for informational purposes in Table A, below. The potential planes of failure developed through back-analysis for static and dynamic conditions for the existing site and slope geometry and pictorially depicted on Plate 6, attached. The results of the anchored wall system are presented on Plate 7, attached. [It should be understood that thin surficial failures may still occur on the steeper face of the lower portion of this sites' western slope, but these should not pose a threat to the overall integrity of the anchored bulkhead walls.]

Profile Condition	Minimum Static Factor of Safety	Minimum Dynamic Factor of Safety
Existing Wall Configuration	1.271	1.012
Anchored walls	1.582	1.217

Summary of Stability: Based on the above, and in consideration of the apparently competent nature of the bulk of the underlying dense silty sand soil, it is our professional opinion that the site's western slope is generally stable in its current configuration under static and dynamic conditions. With the wall being anchored in-place the factors of safety are within the ordinarily acceptable range and, in our professional opinion, are indicative of a stable wall and slope configuration. As mentioned earlier, the anchored bulkhead walls do not, and should not be expected to, restrain or stabilize the entire slope. They are only capable of enhancing the stability of the upper several feet of the slope along the crest. The lower portion of this steep bluff slope will continue to be subject to shallow erosional damage and surficial landslide activity, though we do not believe such activity will pose a threat to the anchored walls.

Wall Drainage Measures

The existing tiered bulkhead walls were constructed with a basal drain pipe surrounded with washed rock wrapped in a layer of geotextile. With some minor exceptions where the wall's movement has exposed small segments of the geotextile wrapped drain pipe, these drains are still in-place and functional. Given that the only water these drain pipes collect is the result of surface water infiltration the magnitude [volume] of water handled by these drains is small. In our professional opinion, the existing drains are adequate and are appropriate for the repaired wall. In addition, in the event that any seepage should build up behind any of these walls it is possible for the water to seep out through the spaces between each of the timber lagging planks. Thus, the risk of hydrostatic pressure buildup is considered very low to negligible.

One element of concern, however, is the presence of an irrigation system along each of the landscaped areas between the tiers of the wall. This irrigation system causes a potentially large magnitude of water to be spread over the backfilled areas of the walls and this results in saturation of the underlying soils. We strongly recommend that after the bulkhead walls are repaired no irrigation be allowed along the backfilled surfaces between these walls. Be preventing irrigation the risk of backfill, and underlaying soil, saturation will be essentially eliminated, a positive factor in wall and slope stabilization.

Temporary Erosion Control

Because of the sloping nature of the western portion of this property beyond the toe of the bulkhead wall, and because a significant amount of pedestrian activity is anticipated along the toe of the "failing" lower tier of the pin-pile and lagging wall, we believe it is important that appropriate temporary erosion control measures be implemented in design and construction. Such measures should help to avoid the potential for development of gullies or rills in downslope surfaces that could ultimately flush soil fines [sediment] off the site and onto the beach below.

As a minimum measure we recommend that the earthwork contractor erect a temporary silt fence along the downgrade perimeter of the construction area. The fence should be set sufficiently far from the face of the lower tier of the bulkhead wall work area to allow for free passage for the workmen. In this case we estimate that the filter fence should be no more than about ten (10) feet from the toe of the lower tier of the wall.

The silt fence should consist of a geotextile fabric produced for this purpose and suitable for erosion control, such as a Mirafi Envirofence or an equivalent approved in writing by the geotechnical engineer. It should be supported on "Hog Wire" attached to steel or wooden stakes driven into the ground at relatively close center to center spacings. Approximately the bottom twelve (12) inches of the geotextile should be buried into the site subgrade to help avoid the risk of sediment laden water flowing out beneath the fence. A typical pictorial depiction of this filter fence is presented on Plate 8, attached.

Where the emergency repair process exposes the native soils they will be subject to all of the erosive forces of the elements, such as wind, rain, freeze, thaw and drying (by the sun). As a result they should be expected to deteriorate rapidly if not adequately protected. To achieve protection against the elements we recommend that all such areas be revegetated as quickly after construction as possible. We recommend that you seek input from your landscape architect regarding the most appropriate seed mixture. We also presume that the seed will be placed and protected with some form of mulch, presumably by "hydroseeding" or by some other form of landscaping.

Schematic Only - Not to Scale

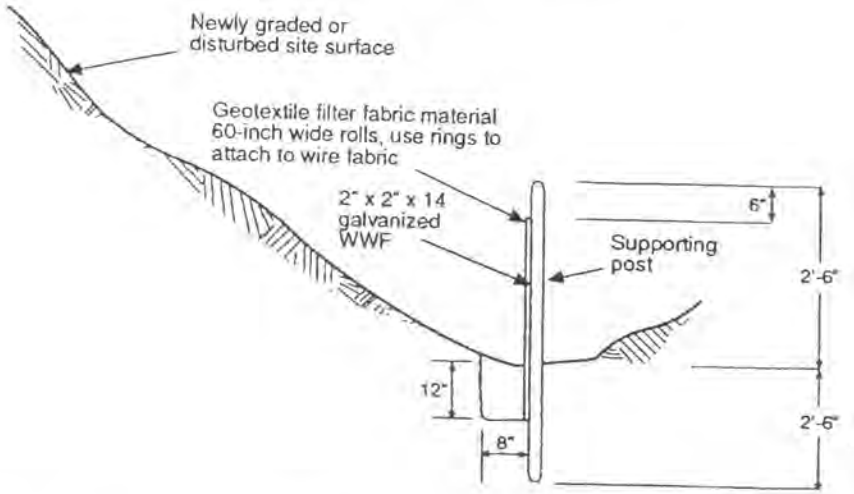

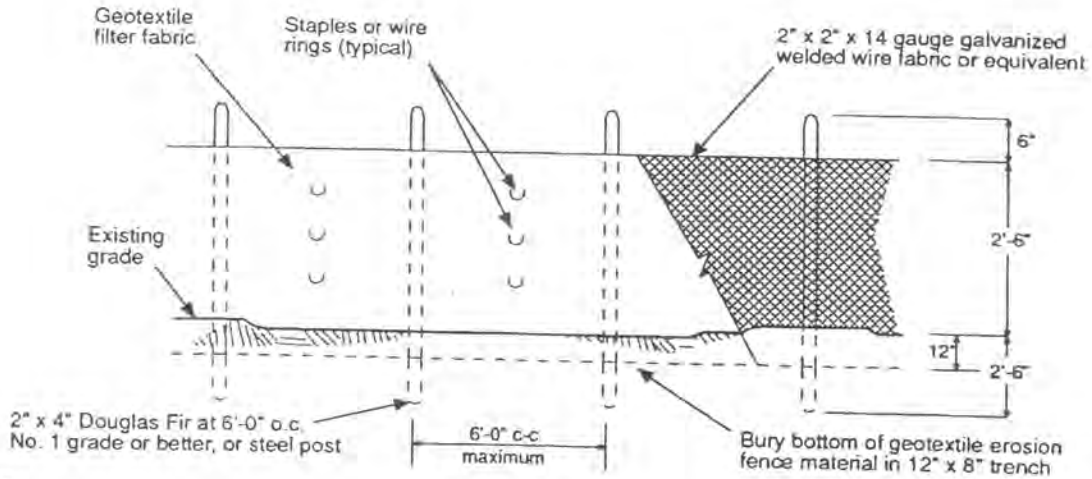

NOTES

- The filter should be purchased in a continuous roll cut to the length of the barrier to avoid use of joints. When joints are necessary, filter cloth should be spliced together only at a support post, with a minimum six-inch overlap, and both ends securely fastened to the post.
- The filter fabric fence should be installed to follow the site contours (where feasible). The fence posts should be spaced a maximum of six feet apart and driven securely into the ground (minimum, of 30 inches).
- A trench should be excavated, roughly eight inches wide and twelve inches deep, upslope and adjacent to the wood post to allow the filter fabric to be buried.
- When standard strength filter fabric is used, a wire mesh support should be fastened securely to the upslope side of the posts using heavy-duty wire staples at least one inch long, tie wires, of hog rings. The wire should extend into the trench a minimum of four inches and should not extend more than thirty-six inches above the original ground surface.
- The standard strength filter fabric should be stapled or wired to the fence, and a minimum of twenty inches of the fabric should be extended into the trench. The fabic should not extend more than thirty-six inches above the original ground surface. Filter fabic should not be stapled to existing trees.
- When extra-strength filter fabic and closer post spacing are used, the wire mesh support fence may be eliminated. In such a case, the filter fabric is stapled or wired directly to the posts.
- The 12" x 8" trench should be backfilled with 3/4 inch minimum diameter washed gravel.
- Filter fabric fences should be removed when they have served their useful purpose, but not before the upslope area has been permanently stabilized.
- Filter fabic fences should be inspected immediately after each rainfall and at least daily during prolonged rainfall. Any required repairs should be made immediately by the contractor.

Limitations

The above information is being provided solely as a service to our client. Under no circumstances should the above information be interpreted to mean that Creative Engineering Options, Inc., is assuming any responsibility for construction site safety, measurements or dimensions, or the contractors or subcontractors activities, means or measures. Such a responsibility is not being implied and should not be inferred, but should remain solely with the owner and his or her contractor.

Our recommendations and conclusions are based on the site materials observed, our geotechnical engineering analyses, the design information provided, and our experience and engineering judgement. The conclusions and recommendations are professional opinions derived in a manner consistent with that level of care, skill and competence ordinarily exercised by other members of the profession in good standing currently practicing under similar conditions in this area only. No other warranty, expressed or implied, is made.

The recommendations submitted in this report are based upon the data obtained from our site observations and data review. These data pertain to the times and locations where they were observed only, but are assumed to be reasonably representative of the conditions beneath the majority of the emergency repair area. Soil and groundwater conditions may vary from those observed. The nature and extent of variations may not become evident until construction. If variations do appear, the geotechnical engineer should be requested to re-evaluate the recommendations of this report and to modify or verify them in writing prior to proceeding with the construction.

Additional Services

Construction Monitoring and Testing: For continuity, we recommend that CEO be retained to provide geotechnical services during performance of the emergency construction work. This is to observe compliance with the design concepts, specifications or recommendations and to allow design changes in the event subsurface conditions differ from those anticipated prior to the start of construction. For this project we anticipate that it will be necessary to periodically monitor the drilling and installation of the Titan anchors, and to proof test the installed anchors to verify their design capacity.

We anticipate that the City of Des Monies may also require a specific series of monitoring services as part of their typical special inspection requirements. Unfortunately, these will not be known before the City completes the plan and specification review.

Warning! It is CRITICAL that the owner, his or her architect, the structural engineer and the contractor(s) read the ENTIRE report. Do NOT base any design or construction decisions on any portion of the report text taken out of context. If decisions are based on the use of only a part of the recommendations there is a significant risk that the decisions could result in an impractical or uneconomic design or construction procedure, could add significant risk to the project, and/or could result in damage to, or even failure of, the design element.

Closure

We appreciate the opportunity to have been of service to you in developing an appropriate geotechnical response for this emergency bulkhead wall repair. We trust that the information provided herein is sufficient to allow the remainder of the design and construction team to obtain the appropriate permits and perform the emergency repair work.

We are also looking forward to working with you during the performance of the emergency repair work in the field once it gets underway. In the meantime should you have any questions regarding any point raised in this report please call.

APPENDIX A

01-2389

ANCHOR PROOF LOAD TEST PROCEDURE

APPENDIX A

01-2389

"TITAN" ANCHOR PROOF LOAD TESTING

1) After each Titan anchor is installed to the design length and has been grouted in-place, install a 1-inch thick and 12-inch square, or larger, A-36 steel load spreader plate over the free end of each anchor, passing anchor rod through the pre-cut hole in the plate, and set each plate firmly against the face of the steel waler beam.

2) Place loading jack assembly over free end of anchor rod and butt the base of the jack against the steel load spreader plate. Place nut on anchor rod and tighten down "hand tight" to push the jack firmly in place.

3) Apply a "seating" load to the anchor to "set" the jack assembly firmly against the load spreader plate and underlying resistant waler beam and wall. Then release loading assembly and reset the loading jack and movement recording gauges or graphs to zero, and re-tighten the anchor nut with a short wrench.

4) Set laser level on firm and unyielding stand which is NOT attached to the existing structure and locate laser beam "point" on the scaled test data sheet. Mark the center of the laser "point" and note it as the start point for the test.

5) Load each anchor to the proof test load, 130% of design anchor load (as indicated on page 11 of this report) in 2,000 pound load increments. Pause at the end of each incremental load application for 2-1/2 minutes to determine if anchor creep is occurring and then mark the center of the laser "point" for each load increment. Record anchor movement, then add next incremental load and repeat process.

6) Continue anchor loading until a minimum of 130% of the design load is achieved. Record the anchor movement, and leave load in-place for a minimum of ten (10) minutes to determine if anchor/soil creep is occurring.

Mark the center of the laser "point" at end of ten (10) minute period, record anchor movement and note it is the maximum test load.

7) Carefully and slowly release the anchor load to zero and mark the center of the laser "point" at zero load and note it is the end of the test. Record anchor movement after all load is removed.

8) Remove loading jack and gauge assembly from free end of anchor rod.

9) With the exception of one randomly selected anchor which is to be tested to 200% of the design load or the anchors design capacity of about 48 kips, repeat the anchor proof test procedure (steps 1 through 8) for each anchor.

10) Anchor deflection, or [pull out] movement, of less than one half inch is considered to indicate an "acceptable" anchor. If greater movement than this is recorded, then an additional anchor may need to be installed to compensate.

11) After satisfactory completion of proof load test and removal of jack assembly, add shaped steel washer and replace the nut on the free end of the anchor rod. Tighten the anchor rod nut against the shaped steel washer until no additional movement of the wrench can be achieved without the use of a "lever" or "pry" bar. Do NOT use a pry bar to tighten the anchor locking nuts.

12) Repeat the process outlined in steps 1 through 11 for the one randomly selected anchor, but apply a test load of 200% of the maximum design anchor load.

13) Geotechnical engineer shall record results of anchor proof load testing and provide written summary report on completion.

14) The manufacturer has placed a maximum "ultimate" load rating of seventy two (72) kips, and a forty-three (43) kips *permanent* load rating, on these anchor rods. This maximum permanent load is governed by the yield strength of the rod with an allowance for sacrificial loss of steel due to corrosion over the anchors' lifetime. This seventy-two (72) kip load is NOT to be exceeded in testing.

APPENDIX B

02-2389

USE OF THIS REPORT BY OTHERS

DISTRIBUTION

01-2389

5 Copies

Mr. Ron Nolten
Dochnahl Construction, Inc.
16442 S.E. Renton - Issaquah Road
Renton, Washington 98059

Creative Engineering Options, INC.
CEO
A firm practicing in the geosciences

November 11, 2002 02-2389-1

Mr. Heinz Pieniak
25107 - 8th Place South
Des Moines, Washington 98198

Subject: **Final Monitoring Report**
Emergency Wall Repair
25107 - 8th Place South
Des Moines, Washington
[Des Moines Permit No. B2002-0112]

Dear Mr. Pieniak:

Introduction

As requested, we have been providing geotechnical consultation and construction monitoring services during the emergency repair of a "failing" bullhead wall along the crest of the western slope at the subject site. Our services involved the monitoring of the drilling and load testing of a series of Titan tie-back anchors, and monitoring of the installation of drainage and erosion control measures. The following paragraphs provide a more detailed summarization of our field observations and tie-back anchor test data.

Field Observations

General: This emergency repair became necessary because some of the slope soils had "failed" out beneath the bottom of the lower tier of the pin-pile and lagging wall system. As a result the lightweight GeoFoam block backfill had settled leading

to the development of a "sagging" wall backfill and basal drain exposure. Additionally, several of the steel pin-piles exhibited moderate to severe bending as a result of the application of high lateral loads. As indicated above or services on this project primarily involved two phases of work. The first was the drilling and grouting of a series of drilled-in-place Titan tie-back anchors and the second was the installation of wall and slope drainage and erosion control measures.

Our services began on May 20, 2002 and were completed on November 8, 2002. For informational purposes, and to help you develop a "complete" project file, we have provided copies of our Field Construction Inspection Reports as an attachment to this final report.

Preconstruction Meeting: On Monday May 20, 2002 our representative attended a preconstruction meeting at City Hall. During this meeting the City staff reviewed the project plans and specifications and verified the special inspection services to be conducted during the repair. They expressed particular concern regarding the implementation of post repair erosion control measures, or the final landscaping of the slope below the construction area.

Titan Anchor Installation: Our representative also visited the site to observe the Titan tie-back anchor drilling process. The primary purpose of this observation was to verify that the anchors were being drilled back through the loose wall backfill and surficial slope soils and into the dense and competent "native" slope soils. The "typical" anchor drilling profile comprised the following:

- 0 to 3 feet - Styrofoam block wall backfill
- 3 to 9 feet - Light brown to gray-brown, wet, loose, silty fine to coarse sand with a small, though varying, amount of gravel [backfill]
- 9 to 20 feet - Light brown, moist, very dense, silty fine to coarse sand with some rounded gravel, partially cemented [glacial till]

Based on this "typical" drilled anchor hole profile it is our professional opinion that the Titan anchors were located back in the firm and competent undisturbed "native" soil. This was in accordance with the original project specifications.

Titan Anchor Load Testing: After the anchors were all drilled and grouted-in-place, and the grout had an opportunity to set up, our representative returned to the site to monitor the performance of a load test of each of the installed anchors. The primary purpose of this anchor load testing was to verify that the anchors were seating in the firm and competent native soils well behind the wall structure and that, when loaded, the anchors did not creep under the applied load.

We monitored the load testing of seventeen (17) Titan anchors. Fifteen (15) of these anchors were tested to a load of 31.2 kips and two to 23.4 kips [130% of the original design load]. The two lower loaded anchors were used to support the upper portion of the pin-piled wall at the head of the stairway. Based on the application of the test load we developed and recorded a maximum post test anchor deflection of zero to twenty-three (23) mm. We did not record any creep movement of the anchors under the maximum applied test loads.

These deflections are, in our professional opinion, indicative of sound anchors capable of satisfactorily developing the design load capacity. For informational purposes we have provided a summary of the anchor load test data on Table A, attached. In addition, we have provided the plot of load versus deflection for two representative anchors on Plate 1, also attached.

Erosion Control Measures: During the performance of this emergency wall repair the contractor protected the slope surface immediately below the area of remedial construction against the elements and against the detrimental impacts of construction activity. For most of the remedial construction period this was done with a layer of impermeable plastic sheeting nailed to the bottom of the lower tier of the wall. When the repair work moved to the bottom tier of the wall the plastic sheeting was removed and a temporary erosion control filter fence was erected. Based on our limited periodic observations the temporary erosion control measures functioned as originally intended throughout the remedial construction period.

When the initial wall failure began to occur the originally installed plastic drain pipes were "separated" and pulled apart. It appears to us that a substantial portion of these drain pipes was "swept" down the slope and over the crest of the bluff onto

the beach. Prior to the start of the remedial work your contractor, Dochnahl Construction, Inc., installed new unperforated plastic drain pipes. These pipes were connected to the undisturbed and undamaged segments of the original pipes and were then extended down the face of the slope to discharge over the crest of the lower bluff slope. These pipes were anchored-in-place with a series of hand hammered steel stakes and several wraps of wire around the pipe and stake. After these pipes were repaired the contractor covered them with a layer of protective staked-in-place plastic sheeting. This plastic sheeting still remains in-place and functional.

Also as part of this emergency repair Dochnahl Construction, Inc. has repaired the basal drain pipes behind each of the tiers of the original wall. This repair consists of cutting out and replacing segments of damaged pipe [where appropriate] or replacing pea gravel or washed rock around exposed segments of the pipe, re-wrapping them with geotextile and then protecting the drain with a new segment of timber lagging board. Where required, and observed by us, this treatment was performed in general accordance with the original specifications.

The last step in erosion control was the installation of a layer of "staked" in-place GeoWeb cellular confinement system material. This layer was placed over the hand leveled upper slope surface [after the old timber landscape "rack" had been removed and disposed]. The GeoWeb was placed on a layer of geotextile and, after the cells were opened, the GeoWeb was staked to the slope surface with segments of #4 field bent reinforcing bar. The stakes, which were driven at an approximately two foot center-to-center spacing parallel to the wall and at about three feet perpendicular to the wall, were approximately three to four feet long. A series of kevlar "tendons" were also threaded through the cells and were attached to several of the stakes as a means of transferring some of the cell loads back to the head of the slope to the attachment to the wall. After installation the cells were filled with a hand packed sand material.

This protective GeoWeb material was placed over the exposed portion of the slope crest immediately along the toe of the lower of the three tiers of anchored pin-pile and lagging wall. This area, the area disturbed by the remedial construction activity, is now more than adequately protected against the elements. Based on our observations it is our professional opinion that this protective system was installed in a competent and professional manner and in general accordance with the original project recommendations.

We also noted that the contractor had installed a new unperforated, smooth-walled, plastic drain pipe from the north east and northwest roof downspouts out to the area behind the upper tier of wall. This new pipe was connected to a yard type catch basin and, from this structure, to an unperforated and corrugated plastic tightline which was extended down the slope surface to discharge at the beach. The pipe was firmly anchored to the slope face by means of a series of steel stakes driven into the slope to a depth of between three and four feet, and attached to the pipe by several wraps of stainless steel wire. This system, which replaces what was an [apparently] blocked roof downspout drain, now provides a "clean" discharge pathway along with a means of maintaining and cleaning the drain pipe.

Summary

Based on our brief and limited observations it is our professional opinion that the emergency repair of the tiered wall system was carried out in a competent and professional manner. The anchors were drilled into competent soil and, based on load testing, were all considered capable of carrying the maximum design load, should it be applied, without detriment.

It is also our opinion that the contractor has repaired the wall drain system appropriately, and that the drainage measures are more than adequate to remove any subsurface seepage from behind the tiered wall system. It is also our opinion that the slope face below the area of remedial construction has been adequately treated [with GeoWeb] and revegetated to protect the surface against the elements and that this protective treatment has significantly reduced the risk of erosional damage.

Closure

We appreciate the opportunity to have been of geotechnical assistance to you during the performance of this emergency wall repair. We trust that the information provided herein, and in the attachments, is sufficient to satisfy you regarding the adequacy of the repair work and to complete your project record.

Our services have been performed, and our opinions have been derived, in a manner consistent with that level of skill, care and competence ordinarily exercised by other members of the profession in good standing currently practicing

under similar conditions in this area only. No other warranty, express or implied, is made. Should you have any questions regarding any point raised in this report, or the attachments, please call.

Very truly yours,

CREATIVE ENGINEERING OPTIONS, INC.

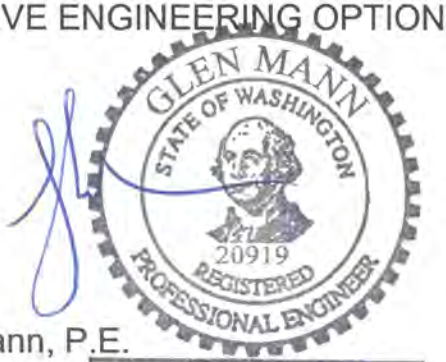

Glen Mann, P.E.
President

Attachments:
Table A; Titan Anchor Test Data
Field Construction Inspection Reports [6]
Sheet 1 of 1; Anchor Load vs. Deflection Plot
Plates 1 through 3; Construction Photographs

c.c.:
Mr. Ron Nolten; Dochnahl Construction, Inc.
Mr. Craig Sutherland; Terra Firma, Inc.
Mr. Bob Meyers; City of Des Moines

Table A
Titan Anchor Load Test Data

Pieniak Residence Wall Repair
02-2389-1

Anchor Number	Anchor Location	Design Load [kips]	Test Load [kips]	Final Anchor Deflection [mm]
1	Center Wall	24	31.2	18
2	"	24	31.2	16
3	"	24	31.2	12
4	"	24	31.2	3
5	"	24	31.2	-4 *
6	"	24	31.2	2
7	"	24	31.2	3
8	Lower Wall	24	31.2	3
9	"	24	31.2	1
10	"	24	31.2	1
11	"	24	31.2	-3 *
12	"	24	31.2	16
13	"	24	31.2	23
14	"	24	31.2	2
15	"	24	31.2	3
16	Stairway Wall	18	21	0
17	"	18	21	0

* Waler beam and pin-piles "pushed" back into lightweight backfill resulting in "deflection" at completion of load test becoming a negative value.

Creative Engineering Options INC. CEO A Firm Practicing in the Geosciences	Job No. 02-2389-1	Page 1 of 1
FIELD CONSTRUCTION INSPECTION REPORT	Time On Site 1:14 p.m	Report Sequence No. 1
	Time Off Site 2:28 pm	Date 5/20/02 — Day of Week Monday
Project Emergency Wall Repair	Weather Cool, overcast, dry.	Travel Time 1¼ hrs

Job Location	Client or Owner	Prepared By
25107-8th Place South, Des Moines	Pieniak	GM
General Contrator	**General Contractor's Superintendent**	**Grading Contractor**
Dochnahl Const. Inc.	—	—

Equipment in Use None

UNSATISFACTORY CONDITIONS PREVIOUSLY REPORTED (Give Report date only. Circle dates of items corrected this report and explain below.)

-N/A-

Permit No.: B2002-0112

- Visited site to attend a pre-construction meeting with the contractor, City official, and client.
- City staff reviewed permit application and questioned "need" for disturbance of slope surface downgrade of repair work area for silt fence installation. We agreed that since no "excavation" was involved it would be acceptable to eliminate the silt fence.
- City staff also asked what revegetation would be used after construction. We explained that any disturbed areas of slope surface would be hydroseeded and covered with straw mulch - this was considered acceptable by City staff.
- Contractor currently anticipates starting work on, or about May 29th, 2002.

Visitors None.	☐ Continued see next page
Attachments None.	Initial: [signature]
Distribution Pieniak; City of Des Moines; file; Dochnahl Const.	

Creative Engineering Options INC.
CEO
A Firm Practicing in the Geosciences

FIELD CONSTRUCTION INSPECTION REPORT

	Job No. 02-2389-1	**Page** 1 of 1	
	Time On Site 830	**Report Sequence No.** 2	
	Time Off Site 900	**Date** MAY 31, 02	**Day of Week** Friday
Project Emergency Wall Repair	**Weather** SUN, warm	**Travel Time** 1hr	
Job Location 25107 9th Pl. So., Des Moines	**Client or Owner** Pieniak	**Prepared By** MT	
General Contrator Dachnahl Const. Inc	**General Contractor's Superintendent**	**Grading Contractor** - N.A. -	

Equipment in Use NONE At time of site visit

UNSATISFACTORY CONDITIONS PREVIOUSLY REPORTED (Give Report date only. Circle dates of items corrected this report and explain below.) - N.A. -

Permit No.: B2002-0112

- ARRIVED ONSITE AS REQUESTED TO OBSERVE PROGRESS DURING ANCHOR DRILLING AT SITE
- ANCHOR #1 has been partially drilled - per CRAIG @ Terra Firma Inc
  - 0-3' STYROFOAM
  - 3'-9' SAND, gravel, wet, (backfill?)
  - 9'-20' Very dense SAND/ consolidated till, lots of gravel
- ANCHOR #1 to be finished (drilling) today; Additional Anchors to be drilled

Visitors NA

☐ Continued see next page

Attachments NA

Distribution

Initial: MT

Creative Engineering Options INC. CEO A Firm Practicing in the Geosciences	Job No. 02-2389-1	Page 1 of 1
FIELD CONSTRUCTION INSPECTION REPORT	Time On Site 10:17am	Report Sequence No. 3
	Time Off Site 12:03 pm	Date 6/5/02 — Day of Week Wednesday
Project: Emergency Wall Repair	Weather: Dry, sunny, windy	Travel Time: hr

Job Location	Client or Owner	Prepared By
25107-8th Place S., Des Moines	Pieniak	GM
General Contrator	**General Contractor's Superintendent**	**Grading Contractor**
Dochnahl Const. Inc.	–	–

Equipment in Use None

UNSATISFACTORY CONDITIONS PREVIOUSLY REPORTED (Give Report date only. Circle dates of items corrected this report and explain below.)

- N/A -

Permit No.: B2002-0112

- At contractors request visited site to observe progress of drilled-in-place anchor installation.
- At time of visit contractor (Terra-Firma) had installed a total of 11 anchors. Two anchors were installed at the upper stage wall on the southern end by the stairs, seven were installed along the face of the third stage of the wall, and one at the stairing at the south end of the fourth stage
- All of the anchors comprise Titan 30/11 threaded bars and, with one exception, they all extend to a length of about 25-feet behind the face-of-wall. One of the upper two anchors only extends to a length of 20-feet.
- All of the anchors have been installed at an angle of approximately 15° down from the horizontal, and with the exception of the shorter upper anchor and the northernmost third stage wall anchor, they all penetrated through and into a dense sand. The two exceptions both penetrated into a dense silty sand with gravel, a glacial till.
- Noted that bare areas of slope surface below walls have been covered either with straw mulch or a pegged-in-place geotextile layer. There is no visible evidence of any surficial erosion.
- Anchor installation will continue and contractor estimates it will be completed by about end of week, Friday June 7th, 2002.

Visitors	Continued see next page
None.	☐
Attachments None	**Initial:** [signature]
Distribution Pieniak; City of Des Moines; Dochnahl Const.; file	

Creative Engineering Options INC. CEO A Firm Practicing in the Geosciences	Job No. 02-2389-1	Page 1 of 1
FIELD CONSTRUCTION INSPECTION REPORT	Time On Site 9:00 a.m.	Report Sequence No. 4
	Time Off Site 12:30 p.m.	Date 6/21/02 — Day of Week Friday
Project Emergency Wall Repair	Weather Dry, Clear, sunny, hot.	Travel Time hr.

Job Location	Client or Owner	Prepared By
25107 - 8th Place South, Des Moines	Heinz Pieniak	GM
General Contrator	**General Contractor's Superintendent**	**Grading Contractor**
Dochnahl Const. / Terra Firma	–	–

Equipment in Use Hydraulic Jack

UNSATISFACTORY CONDITIONS PREVIOUSLY REPORTED (Give Report date only. Circle dates of items corrected this report and explain below.)

- N/A -

Permit No.: B2002-0112

- At contractors' request visited site to monitor performance of tie-back anchor load testing.
- Load tested a total of seventeen (17) anchors; fifteen to a test load of 31.2 kips [130% of DL] and two to 23.4 k [130% of DL]. All of the anchors were considered to be acceptable since no creep was recorded and anchor deflections were between approximately zero and 23 mm. This larger movement was recorded at the end of the waler beam and, in our opinion, is partially bending and deformation of the waler beam and wall.
- On completion of load testing each anchor was "locked off" in general accordance with the project specifications.
- The temporary erosion control measures were observed in-place and were considered to be functional.

Visitors None	☐ Continued see next page
Attachments None.	Initial: [signature]
Distribution Heinz Pieniak; City of Des Moines; Dochnahl Const.; file	

Creative Engineering Options INC.
CEO
A firm practicing in the geosciences

PROJECT NO. 02-2389-1
SHEET 1 OF 1
PROJECT Reniark Wall Repair
COMPUTED BY GM DATED 6/22/02
SUBJECT Anchor Proof Test Loading.
CHECKED BY DATED

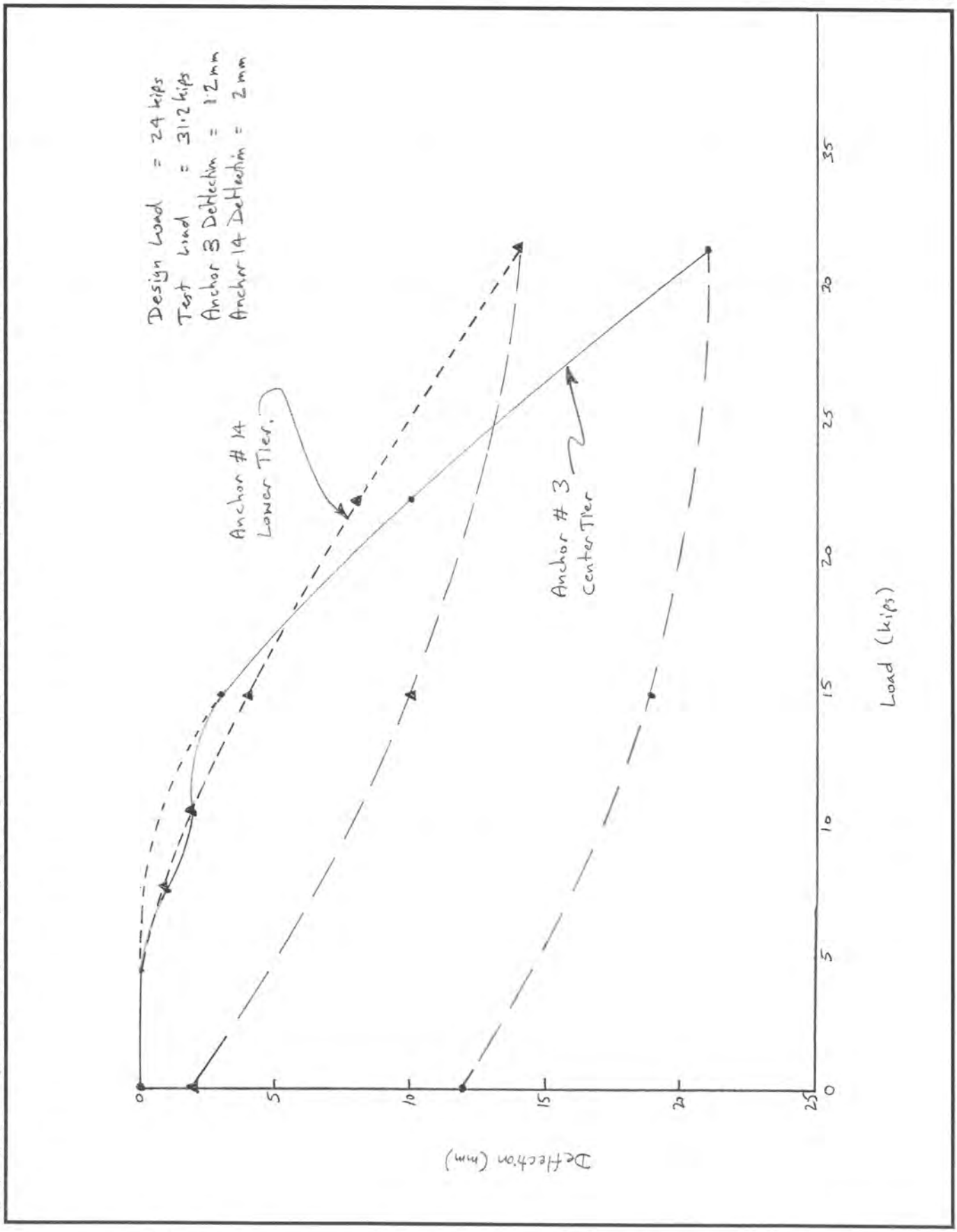

5418 159th Place NE • Redmond, WA 98052 • (425) 883-6889 • FAX (425) 867-9664 • www.ceogeo.com

Creative Engineering Options INC. CEO A Firm Practicing in the Geosciences	Job No. 02-2389-1	Page 1 of 1
FIELD CONSTRUCTION INSPECTION REPORT	Time On Site 1:17 pm.	Report Sequence No. 5
	Time Off Site 2:23 pm.	Date 10/29/02 — Day of Week Tuesday
Project: Emergency Wall Repair	Weather: Dry, warm, sunny.	Travel Time: hr

Job Location	Client or Owner	Prepared By
25107 - 8th Place S., Des Moines	Henry Pieniak	GM
General Contrator	**General Contractor's Superintendent**	**Grading Contractor**
Dochnahl Construction	-	-

Equipment in Use None

UNSATISFACTORY CONDITIONS PREVIOUSLY REPORTED (Give Report date only. Circle dates of items corrected this report and explain below.)

- N/A -

Permit No.: B2002-0112

- At contractors request visited site to evaluate slope area where GeoWeb material is to be installed, and to discuss installation with contractors staff.
- At the time of our visit we observed that the timber "frame" that originally covered a portion of the slope immediately below the toe of the lower stage wall and next to the stairway had been removed. This area had been overlain with a layer of geotextile in preparation for GeoWeb placement.
- Contractor has perforated cell wall material on-site per original specifications. He has also welded a segment of rebar between bolted-in-place segments of "C" channel to which the GeoWeb support tendons are to be tied.
- Explained need for 3' to 5' long steel stakes to pin the GeoWeb through the lower surficial soil surface. Also pointed out need to attach tendons to several cell walls to help support the cells when filled.
- Based on our visual observations it appears that about 5 to 6 feet of the slope area immediately in-front of the lower wall, an area disturbed by the remedial construction work, needs to be covered with GeoWeb.
- Contractor is also attempting to "open" the roof downspout tightline at north end of site. If unable to clean out he will replace with a new buried tightline. This line will be extended to discharge at beach level.

Visitors	Continued see next page
None.	☐
Attachments None.	**Initial:** [signature]
Distribution Henry Pieniak, City of Des Moines, Dochnahl Const., file	

Creative Engineering Options INC.
CEO
A Firm Practicing in the Geosciences

FIELD CONSTRUCTION INSPECTION REPORT

	Job No. 02-2389-1	**Page** 1 of 1	
	Time On Site 1:17 pm.	**Report Sequence No.** 5	
	Time Off Site 2:23 pm.	**Date** 10/29/02	**Day of Week** Tuesday
Project Emergency Wall Repair	**Weather** Dry, warm, sunny.	**Travel Time** hr	

Job Location 2507 - 8th Place S., Des Moines	**Client or Owner** Heinz Pieniak	**Prepared By** GN
General Contrator Dschnachl Construction	**General Contractor's Superintendent** -	**Grading Contractor** -

Equipment in Use None

UNSATISFACTORY CONDITIONS PREVIOUSLY REPORTED (Give Report date only. Circle dates of items corrected this report and explain below.)

- N/A -

Permit No.: B2002-0112

- At contractors request visited site to evaluate slope area where GeoWeb material is to be installed, and to discuss installation with contractor staff.
- At the time of our visit we observed that the timber "frame" that originally covered a portion of the slope immediately below the toe of the lower stage wall and next to the stairway had been removed. This area had been overlain with a layer of geotextile in preparation for GeoWeb placement.
- Contractor has perforated cell wall material on-site per original specifications. He has also welded a segment of rebar between bolted-in-place segments of "C" channel to which the GeoWeb support tendons are to be tied.
- Explained need for 3' to 5' long steel stakes to pin the GeoWeb through the looser surficial soil surface. Also pointed out need to attach tendons to several cell walls to help support the cells when filled.
- Based on our visual observations it appears that about 5 to 6 feet of the slope area immediately in-front of the lower wall, an area disturbed by the remedial construction work, needs to be covered with GeoWeb.
- Contractor is also attempting to "open" the roof downspout tightline at north end of site. If unable to clean out he will replace with a new downspout tightline. This line will be extended to discharge at beach level.

Visitors None.

☐ **Continued see next page**

Attachments None.

Initial: GN

Distribution Heinz Pieniak, City of Des Moines, Dschnachl Constr., file

Creative Engineering Options INC.
CEO
A Firm Practicing in the Geosciences

FIELD CONSTRUCTION INSPECTION REPORT

Job No. 02-2389-1	**Page** 1 of 1		
Time On Site 11:15am	**Report Sequence No.** 6		
Time Off Site 11:45a.m	**Date** 11/8/02	**Day of Week** Friday	
Project Emergency Wall Repair	**Weather** Cool, overcast, showers	**Travel Time** 1 hr	
Job Location 25107-8th Place S., Des Moines	**Client or Owner** Heinz Pieniak	**Prepared By** GM	
General Contrator Dachnahl Construction	**General Contractor's Superintendent** -	**Grading Contractor** -	

Equipment in Use None.

UNSATISFACTORY CONDITIONS PREVIOUSLY REPORTED (Give Report date only. Circle dates of items corrected this report and explain below.)

- N/A -

Permit No.: B2002-0112

- At contractors request visited site to observe completed erosion control measures. At the time of the visit the contractor had completed the installation of the Geoweb Cellular containment materials over the disturbed slope surface area immediately below the anchored walls.
- We noted that the Geoweb material was of the perforated cell wall type per the project specifications and that it was installed over a relatively flat soil surface covered with a layer of geotextile. The Geoweb was anchored-in-place with segments of #4 rebar set at about 2-foot centers perpendicular to the wall and 3-foot centers parallel to the wall. We also noted that the keyway tendons were in-place at about 2-foot centers and that they were "anchored" to the steel stakes within the Geoweb to help support the loads.
- The Geoweb cells have been backfilled with a "hand placed" clean sand.
- We also noted that a new 4-inch diameter roof downspout discharge pipe has been installed from the N.W. corner of the house out to a catch basin in the upper rear wall area. From this point the drain tightline has been extended down the western slope to discharge at the beach. The pipe has been anchored to the slope with steel stakes and multiple straps of stainless steel wire.
- Based on our observations, it is our opinion that these drainage and erosion control measures have been installed in general accordance with the original plans.

Visitors None.

☐ **Continued see next page**

Attachments None.

Initial: GM

Distribution Heinz Pieniak; City of Des Moines; Dachnahl Const., file.

Figure 1: View along the face of the center and lower tier of the pin-pile and lagging wall showing the drilled-in-place Titan anchor rods protruding from the wall face. Note also the layer of protective plastic along the toe of the lower tier of the wall.

Figure 2:

View down the southern edge of the western bluff slope on this property showing the protective plastic sheeting over the re-installed perimeter drain pipe.

Figure 3:

View up the southern stairway showing the locked off Titan anchors and the steel waler beams over the front of the upper tier of the wall.

Figure 4: View along the face of the center and lower tiers of the repaired wall showing the anchors and waler beams in-place.

Figure 5: View down the southern end of the slope showing the GeoWeb material in-place and the cells filled with "hand packed" sand. This system protects this portion of the slope surface degraded by the repair work against the elements.

Figure 6: View of northern end of GeoWeb and wall also showing "hand packed" sand cell backfill extending out over area of slope crest disturbed by the repair work.

PSI Information To Build On
Engineering • Consulting • Testing

REPORT OF FIELD INSPECTION AND GROUT COMPRESSION TEST

CLIENT:	Craig Sutherland Terra Firma Drilling 1952 SW 172nd Burien, WA 98166	PROJECT:	Pieniale Residence 25107 8th Pl. So.
		PERMIT NO.:	B2002-0112
DATE:	June 12, 2002	JOB NO.:	**712-20105-1 R1**
TECHNICIAN:	G. Lloyd	REPORT NO.:	**CR10288**

FIELD DATA

LOCATION OF PLACEMENT: Grouting of lower row of soil nails
Samples were taken at cubic yards of cubic yards placed total.

Date Placed	June 12, 2002	**Supplier**	job mix
Time		**Mix Number and Proportions**	job mix
Delivery Ticket No.	n/a	**Cement**	1 bag cement, Type III
Slump	Fluid	**Water**	5 gal
Air Content, %		**Fine Aggregate**	
Air Temperature, °F	59	**Flyash**	
Grout Temperature, °F	59	**Admixture**	
Date Received In Lab	June 12, 2002		
Field Data Submitted By	PSI/G. Lloyd		

NOTE: APPLICABLE ASTM STANDARDS, UNLESS OTHERWISE INDICATED: MAKING SPECIMENS: C31-96 (EXC. SEC. 9.2.2); SLUMP: C143-97 (EXC. SEC. 6); TEMPERATURE: C1064-86(03), SAMPLING: C172-97

COMPRESSION TEST RESULTS

Sample No.	Cube Width (in.)	Surface Area (in.²)	Date Tested	Age (days)	Load (lbs.)	Compressive Strength (p.s.i.)	Fracture Type
A	2.00	4.00	6/19/02	7	13200	3300	Cone
B	2.00	4.00	7/10/02	28			
C	2.00	4.00	7/10/02	28			
Design Strength Specification:				28		4000	

ASTM Test Method: ☒ C31 ☐ C39 ☒ C143 ☒ C172 ☐ C231 ☐ C1064 ☐ C1231 ☐ Other:

OBSERVATIONS

- ☒ Cubes cast by PSI representative.
- ☒ Cubes picked up by PSI representative.
- ☒ Test results comply with applicable specifications.
- ☐ Test results do not comply with applicable specifications.
- ☐ Reinforcing steel was found to comply with plans and project specifications.
- ☐ Reinforcing steel does not comply with plans and project specifications.
- ☒ Reinforcing steel not inspected by PSI representative.

WORK CONFORMS: ☐ YES ☐ NO

REMARKS:
Sampled grout at location listed above.

Respectfully submitted,
Professional Service Industries, Inc.

Sam Yaghmaie, P.E.
Department Manager, Seattle Construction Services

cc: City of Des Moines

THESE TEST RESULTS APPLY ONLY TO THE SPECIFIC SAMPLES TESTED AND MAY NOT BE INDICATIVE OF THE ENTIRE CONCRETE PLACEMENT.
REPORTS MAY NOT BE REPRODUCED, EXCEPT IN FULL, WITHOUT WRITTEN PERMISSION BY PROFESSIONAL SERVICE INDUSTRIES, INC.

dochnahl construction inc.

May 23, 2002

Robert L. Meyers, C. B. O.
City of Des Moines
21630 – 11th Avenue South
Suite D
Des Moines, Washington 98198-6398

Re: Permit number B2002-0112
Pieniak residence
25107 – 8th Place South
Des Moines, Washington 98198

Dear Mr. Meyers,

The following is a list of special inspections for the project named above:

Drilling of anchors, periodic testing:	Creative Engineering Options, Inc. 5418 – 159th Place Northeast Redmond, Washington 98052 425-883-6889
Compression testing of grout:	Pacific Testing Laboratories 10025 South Tacoma Way Lakewood, Washington 98499 253-589-1804
Load testing of anchors:	Creative Engineering Options, Inc. 5418 – 159th Place Northeast Redmond, Washington 98052 425-883-6889

16442 S.E. Renton-Issaquah Rd. · Renton, Washington 98059 · (425) 255-7416 · fax (425) 227-5788

We appreciate your assistance with this matter. If any additional information is needed, please don't hesitate to contact our office at (425) 255-7416. Our office hours are Monday through Friday, 8:00 AM to 5:00 PM.

Sincerely

Ronald B. Nolten PRES.

Ronald B. Nolten
Dochnahl Construction, Inc.

Community Development Department
Building Division

Inspection Request Line (206) 870-7576
24 Hour Notice Required
Hours 8:00a.m. - 4:30p.m. Monday thru Friday

Permit Number: B2002-0112
Permit Type: Building Permit
Job Address: 25107 8TH PLACE SOUTH
Valuation: $24,000.00
Owner's Value: 24000
Applicant's Name: PIENIAK HEINZ A TTEE
Owner's Name: PIENIAK HEINZ A TTEE
Owner's Address: 25107 8TH PL S
DES MOINES WA 98198
Contractor's Name: DOCHNAHL CONSTRUCTION INC
Contractor's Address: 16442 SE RENTON ISSAQUAH RD
RENTON, WA

Date Applied: 04/15/2002
Date Issued: 05/20/2002
Parcel No.: 2560806076
Phone No.:
Phone No.:

Phone No.: (425) 255-7416
WA Lic. No.: DOCHNC*241R9
UBI No.:

Construction Type:		Occupancy:	, ,		
Bldg. Height:	0	No. Stories:	0	No. Bedrms:	0
No. of Units:	0	Total SqFt:	0	Lot Coverage:	0
Setbacks, Front:	0	Rear:	0	Side A:	0
Setbacks, Side B:	0	Side C:	0		
Total Fees:	$799.50	Payments:	$799.50	Balance Due:	$0.00

Work Description: RETAINING WALL REPAIR

Sales Tax Notice: Sales tax relating to construction and construction materials in the City of Des Moines must be reported on your sales tax return form and coded **City of Des Moines #1709**.

Office Use Only

Special Instructions:

INSPECTION RECORD	REQUIRED	NOT APPROVED	APPROVED
Footings:	N	Date: _____ By: ____	Date: _____ By: ____
Foundation Walls:	Y	Date: _____ By: ____	Date: _____ By: ____
Footing Drains:	Y	Date: _____ By: ____	Date: _____ By: ____
Underfloor:	N	Date: _____ By: ____	Date: _____ By: ____
Floor Slab:	N	Date: _____ By: ____	Date: _____ By: ____
Roof Nailing:	N	Date: _____ By: ____	Date: _____ By: ____
Shearwall Nailing/HD's:	N	Date: _____ By: ____	Date: _____ By: ____
Framing:	N	Date: _____ By: ____	Date: _____ By: ____
Insulation:	N	Date: _____ By: ____	Date: _____ By: ____
Sheetrock Nailing:	N	Date: _____ By: ____	Date: _____ By: ____
Height Survey:	N	Date: _____ By: ____	Date: _____ By: ____
Final Eng.-Drainage:	Y	Date: _____ By: ____	Date: _____ By: ____
Final Eng.-Special Req.:	N	Date: _____ By: ____	Date: _____ By: ____
Final D.S.-Parking:	N	Date: _____ By: ____	Date: _____ By: ____
Final D.S.-Landscaping:	Y	Date: _____ By: ____	Date: _____ By: ____
Final D.S.-Special Req.:	N	Date: _____ By: ____	Date: _____ By: ____
Final Fire:	N	Date: _____ By: ____	Date: _____ By: ____
Final Building:	Y	Date: _____ By: ____	Date: _____ By: ____
Cert. of Occupancy:	N	Date: _____ By: ____	Date: _____ By: ____
Sewer District Approval:		Date: _____ By: ____	Date: _____ By: ____
Water District Approval:		Date: _____ By: ____	Date: _____ By: ____

CITY OF DES MOINES
COMMUNITY DEVELOPMENT DEPARTMENT
BUILDING PERMIT APPLICATION

BLDG
BUILDING PERMIT APPLICATION

Application Date 4-15-02 Issue Date _____ Permit No. B2002-0112

Permit Types

☐ Building Permit	☐ Right of Way Permit	☐ Residential	☐ New
☐ Sign Permit	☐ Demolition Permit **Sewer Capping Permit Required**	☐ Commercial	☐ Addition
			☒ Repair
☐ Fire Permit	☐ Land Clearing	☐ Multi-Family	☐ Alteration

PROJECT INFORMATION

Project Address: 25107 8TH PLACE S. Contact: RON NOLTEN

Property Owner: Heinz Pieniak Contact Phone: (425) 255-7416

Property Owner's Address: 25107 8th Place South Contractor: DOCHNAHL CONST. INC

Owners Phone: 206-824-7534 Address: 16442 SE. RENTON ISSAQUAH RD. RENTON, WA. 98059

Type of Construction.: RETAINING WALL REPAIR Phone: (425) 255-7416

UBI No: C 600 204 489 **WA State Contractors Lic. #** DOCHNC * 241 R9

Occupancy Group: _____ **Exp. Date:** 7-3-02

SITE INFORMATION

King County Tax Assessor's No.: 256080-6076-07 **Des Moines Zoning:** _____

Square footage of lot: _____ Square footage of impervious surface: *Existing* _____ *New* _____

Setbacks **Building height:** _____ Lot coverage: _____%

Front yard: _____ Rear yard: _____ Side yard A: _____ Side yard B: _____

STRUCTURAL INFORMATION

Building Area

Basement: _____ sq.ft. First story: _____ sq.ft. Second story: _____ sq. ft.

Garage: _____ sq.ft. Decks: _____ sq.ft Miscellaneous: _____ sq. ft.

Total new area: _____ *sq. ft.*

Building use: _____ Building height: _____ Number of units: _____

Number of stories: _____ No. of bedrooms: _____

BRIEF DESCRIPTION OF WORK BEING PERFORMED UNDER THIS PERMIT
RETAINING WALL REPAIR, TIEBACK ANCHORS.

OWNER'S VALUATION (Labor and materials must be included) $ $24,000^{00}$

CONTRACTOR BONDING AND EMPLOYEE INSURANCE INFORMATION
(Required for projects valued over $5,000 per RCW 19.27.095.)

Interim Construction Loan or Payment Bond Information

Company name: _____ Contact person: _____

Company address: _____ Telephone number: _____

Verification of Contractor's estimate of payroll and paid industrial insurance premium: _____

NOTICE
This permit becomes null and void if work or construction authorized is not commenced within 180 days, or if construction of work is suspended or abandoned for a period of 180 days at any time after work has commenced. I also understand that according to the Uniform Building Code that the plan review for this project will expire within 180 days of completion. I hereby certify that I have read and examined this application and know the same to be true and correct and agree to comply with all City ordinances and state laws regulating the performance of construction.

Property Owner or Contractor/Agent Signature Ronald B. Nolten Date _____

Permit Approved By _____ Date _____

SALES TAX NOTICE: *Sales tax relating to construction and construction materials in the City of Des Moines must be reported on your sales tax return form and coded CITY OF DES MOINES #1709.*

OFFICE USE ONLY

PERMIT NUMBER: 82002-0112 **DATE FILED:** 4/15/02 **OWNER:** PIENIAK

SITE ADDRESS: 25107 8th Place So

CONTACT PERSON: RON NOLTEN

CONTACT PHONE: (425) 255-7416

- [x] BUILDING DEPT
- [ ] PLANNING DEPT
- [ ] TRANSPORTATION DEPT
- [ ] SURFACE WATER DEPT
- [ ] FIRE DEPARTMENT

- [ ] COMMERCIAL
- [x] RESIDENTIAL
- [ ] NEW
- [ ] ADDITION
- [ ] ALTERATION
- [x] OTHER PERMIT TYPE Repair

Consecutive Review [ ] Concurrent Review [ ]

DATE _____

Contact Notified By: Phone / Letter (circle one) Notification Date _____

- [ ] STREETS
- [ ] CURBS
- [ ] GUTTERS
- [ ] LID REQUIRED
- [ ] SIDEWALKS
- [ ] OTHER _____

- [ ] 500 S.F.
- [ ] >5000 S.F
- [ ] RIGHT of WAY DRGE
- [ ] TECH. INFO REPORT
- [ ] OTHER _____

- [ ] ZONING
- [ ] SEPA
- [ ] SHORELINE
- [ ] HEIGHT
- [ ] SETBACKS

Comments:

CITY OF DES MOINES
COMMUNITY DEVELOPMENT DEPARTMENT
BUILDING PERMIT APPLICATION

BLDG
BUILDING PERMIT APPLICATION

Application Date 4-15-02 Issue Date _____ Permit No. B2002-0112

Permit Types

☐ Building Permit	☐ Right of Way Permit	☐ Residential	☐ New
☐ Sign Permit	☐ Demolition Permit Sewer Capping Permit Required	☐ Commercial	☐ Addition
			☒ Repair
☐ Fire Permit	☐ Land Clearing	☐ Multi-Family	☐ Alteration

PROJECT INFORMATION

Project Address: 25107 8TH PLACE S. Contact: RON NOLTEN

Property Owner: Heinz Pieniak Contact Phone: (425) 255-7416

Property Owner's Address: 25107 8th Place South Contractor: DOCHNAHL CONST. INC.

Owners Phone: 206-824-7534 Address: 16442 SE. RENTON ISSAQUA RENTON, WA. 98059

Type of Construction.: RETAINING WALL REPAIR Phone: (425) 255-7416

UBI No: C 600 204 489 **WA State Contractors Lic. #** DOCHNC * 241 RQ

Occupancy Group: _____ **Exp. Date:** 7-3-02

SITE INFORMATION

King County Tax Assessor's No.: 256080-6076-07 **Des Moines Zoning:** _____

Square footage of lot: _____ Square footage of impervious surface: *Existing* _____ *New* _____

Setbacks **Building height:** _____ Lot coverage: _____%

Front yard: _____ Rear yard: _____ Side yard A: _____ Side yard B: _____

STRUCTURAL INFORMATION

Building Area

Basement: _____ sq.ft. First story: _____ sq.ft. Second story: _____ sq. ft.

Garage: _____ sq.ft. Decks: _____ sq.ft Miscellaneous: _____ sq. ft.

Total new area: _____ *sq. ft.*

Building use: _____ Building height: _____ Number of units: _____

Number of stories: _____ No. of bedrooms: _____

BRIEF DESCRIPTION OF WORK BEING PERFORMED UNDER THIS PERMIT
RETAINING WALL REPAIR, TIEBACK ANCHORS.

OWNER'S VALUATION (Labor and materials must be included) $ #24,000.00

CONTRACTOR BONDING AND EMPLOYEE INSURANCE INFORMATION
(Required for projects valued over $5,000 per RCW 19.27.095.)

Interim Construction Loan or Payment Bond Information

Company name: _____ Contact person: _____

Company address: _____ Telephone number: _____

Verification of Contractor's estimate of payroll and paid industrial insurance premium: _____

NOTICE
This permit becomes null and void if work or construction authorized is not commenced within 180 days, or if construction of work is suspended or abandoned for a period of 180 days at any time after work has commenced. I also understand that according to the Uniform Building Code that the plan review for this project will expire within 180 days of completion. I hereby certify that I have read and examined this application and know the same to be true and correct and agree to comply with all City ordinances and state laws regulating the performance of construction.

Property Owner or Contractor/Agent Signature Ronald B. Nolten Date _____

Permit Approved By _____ Date _____

SALES TAX NOTICE: *Sales tax relating to construction and construction materials in the City of Des Moines must be reported on your sales tax return form and coded CITY OF DES MOINES #1709.*

OFFICE USE ONLY

PERMIT NUMBER: B2002-0112 DATE FILED: 4-15-02 OWNER: PIENIAK

SITE ADDRESS: 251078th PL So

CONTACT PERSON: RON NOLTEN

CONTACT PHONE: (425) 255-7416

☐ BUILDING DEPT
☐ PLANNING DEPT
☐ TRANSPORTATION DEPT
☒ SURFACE WATER DEPT
☐ FIRE DEPARTMENT

☐ COMMERCIAL ☒ RESIDENTIAL
☐ NEW ☐ ADDITION ☐ ALTERATION
☒ OTHER PERMIT TYPE Repair

Consecutive Review ☐ Concurrent Review ☐

DATE _____

Contact Notified By: Phone / Letter (circle one) Notification Date _____

☐ STREETS
☐ CURBS
☐ GUTTERS
☐ LID REQUIRED
☐ SIDEWALKS
☐ OTHER _____

☐ 500 S.F. ☐ >5000 S.F
☐ RIGHT of WAY DRGE
☐ TECH. INFO REPORT
☐ OTHER _____

☐ ZONING
☐ SEPA
☐ SHORELINE
☐ HEIGHT
☐ SETBACKS

Comments:
Revise & Resubmit w/ details of wall drains. - LDR 4/18/02

CITY OF DES MOINES
COMMUNITY DEVELOPMENT DEPARTMENT
BUILDING PERMIT APPLICATION

BLDG
BUILDING PERMIT APPLICATION

Application Date 4-15-02 Issue Date _____ Permit No. B2002-0412

Permit Types

☐ Building Permit	☐ Right of Way Permit	☐ Residential	☐ New
☐ Sign Permit	☐ Demolition Permit **Sewer Capping Permit Required**	☐ Commercial	☐ Addition
			☒ Repair
☐ Fire Permit	☐ Land Clearing	☐ Multi-Family	☐ Alteration

PROJECT INFORMATION

Project Address: 25107 8TH PLACE S. Contact: RON NOLTEN

Property Owner: Heinz Pieniak Contact Phone: (425) 255-7416

Property Owner's Address: 25107 8th Place South Contractor: DOCHNAHL CONST. INC.

Owners Phone: 206-824-7534 Address: 16442 SE. RENTON ISSAQUAH RENTON, WA. 98059

Type of Construction.: RETAINING WALL REPAIR Phone: (425) 255-7416

UBI No: C 600 204 489 **WA State Contractors Lic. #** DOCHNC * 241 R9

Occupancy Group: _____ **Exp. Date:** 7-3-02

SITE INFORMATION

King County Tax Assessor's No.: 2560080-6076-07 **Des Moines Zoning:** _____

Square footage of lot: _____ Square footage of impervious surface: *Existing* _____ *New* _____

Setbacks **Building height:** _____ Lot coverage: _____%

Front yard: _____ Rear yard: _____ Side yard A: _____ Side yard B: _____

STRUCTURAL INFORMATION

Building Area

Basement: _____ sq.ft. First story: _____ sq.ft. Second story: _____ sq. ft.

Garage: _____ sq.ft. Decks: _____ sq.ft Miscellaneous: _____ sq. ft.

Total new area: _____ *sq. ft.*

Building use: _____ Building height: _____ Number of units: _____

Number of stories: _____ No. of bedrooms: _____

BRIEF DESCRIPTION OF WORK BEING PERFORMED UNDER THIS PERMIT
RETAINING WALL REPAIR, TIEBACK ANCHORS.

OWNER'S VALUATION (Labor and materials must be included) $ #24,000.00

CONTRACTOR BONDING AND EMPLOYEE INSURANCE INFORMATION
(Required for projects valued over $5,000 per RCW 19.27.095.)

Interim Construction Loan or Payment Bond Information

Company name: _____ Contact person: _____

Company address: _____ Telephone number: _____

Verification of Contractor's estimate of payroll and paid industrial insurance premium: _____

NOTICE

This permit becomes null and void if work or construction authorized is not commenced within 180 days, or if construction of work is suspended or abandoned for a period of 180 days at any time after work has commenced. I also understand that according to the Uniform Building Code that the plan review for this project will expire within 180 days of completion. I hereby certify that I have read and examined this application and know the same to be true and correct and agree to comply with all City ordinances and state laws regulating the performance of construction.

Property Owner or Contractor/Agent Signature Ronald B. Nolten Date _____

Permit Approved By _____ Date _____

SALES TAX NOTICE: *Sales tax relating to construction and construction materials in the City of Des Moines must be reported on your sales tax return form and coded CITY OF DES MOINES #1709.*

OFFICE USE ONLY

PERMIT NUMBER: B2002-0112 **DATE FILED:** 4/5/02 **OWNER:** PIENIAK

SITE ADDRESS: 25107 8th Place So

CONTACT PERSON: Ron Nolten

CONTACT PHONE: (425) 255-7416

☐ BUILDING DEPT
☒ PLANNING DEPT
☐ TRANSPORTATION DEPT
☐ SURFACE WATER DEPT
☐ FIRE DEPARTMENT

☐ COMMERCIAL ☒ RESIDENTIAL
☐ NEW ☐ ADDITION ☐ ALTERATION
☐ OTHER PERMIT TYPE Repair

Consecutive Review ☐ Concurrent Review ☐
DATE _____

Planning Approved

Contact Notified By: Phone / Letter (circle one) Notification Date _____

☐ STREETS ☐ 500 S.F. ☐ >5000 S.F.
☐ CURBS ☐ RIGHT of WAY DRGE
☐ GUTTERS ☐ TECH. INFO REPORT
☐ LID REQUIRED ☐ OTHER _____
☐ SIDEWALKS
☐ OTHER _____

☐ ZONING
☐ SEPA
☐ SHORELINE
☐ HEIGHT
☐ SETBACKS

Comments:

City of Des Moines

Community Development
21630 11th Avenue South, Suite D
Des Moines, WA. 98198
(206) 870-7576 FAX (206) 870-6544

RECEIVED
APR 30
By

RESUBMITTAL/REVISION COVER SHEET

☐ Resubmittal ☐ Revision

Resubmit only to the Community Development Department

DEPARTMENT TO RECEIVE THE RESUBMITTAL Building

Date: 4-30-02 Project Number: B2002-0112

Project Information

Project Address: 25107 8TH PLACE So.

Type of Project: RETAINING WALL REPAIR
(New building, TI, Mechanical, etc.)

Applicant Information

Contact person: RON NOLTEN - DOCHNAHL CONST.

Name: _____ Telephone Number: 425-255-7416

Address: 16442 SE. RENTON ISSAQUAH RD. - RENTON, WA.

Changes must be highlighted or clouded on construction drawings.

DESCRIBE RESUBMITTAL (BE SPECIFIC):

LETTER FROM GEOTECH RE: DRAINAGE & DRAINAGE CONTROL NOTE ADDED TO DRAWING.

FOR OFFICE USE ONLY

ROUTING:	APPROVED BY:	DATE
☐ Community Development		
☐ Engineering		
☐ Fire Department		
☐ Building		
☐ Other _____		
Plan Check Fees:	___hrs. @ $75/hr.=	
Inspector Fees:	___hrs. @ $75/hr. =	

Revisions - 2 copies

CIT OF DES MOINES
COMMUNITY DEVELOPMENT DEPARTMENT

DEVELOPMENT EXCEPTION APPLICATION

AS PERMITTED BY THE ENVIRONMENTALLY SENSITIVE AREAS REGULATIONS

ESA
DEVELOPMENT EXCEPTION ESA

Application Date: 4/17/2002 Permit No.: ESA02-0002

PROJECT INFORMATION

Project Address: 25107 8th Place S.

Property Owner: Pieniak, Hienz Owner's Phone Number: 824-7534

Owner's Address: Same

City: Des Moines State: WA Zip: 98198

Contact Person: Hienz **Contact number:** Same

Type of Exception to be determined by Planning Official

- ☐ Development other than one single family dwelling within the buffer area of a wetland or stream [DMMC 18.86.094(3)].
- ☐ Development of a previously altered ESA [DMMC 18.86.094(6)].
- ☐ Limited waiver of hillside disturbance limitations [DMMC 18.86.094(4)].
- ☐ Emergencies [DMMC 18.86.096].
- ☐ Drainage facilities [DMMC 18.86.098].
- ☐ Trails and trail-related facilities [DMMC 18.86.100].
- ☐ Utilities and roadway construction [DMMC 18.86.101].
- ☐ Stream crossings [DMMC 18.86.102].
- ☐ Stream relocation and dredging [DMMC 18.86.103].
- ☐ Stream channel, stream bank, bluff or shore stabilization [DMMC 18.86.104].
- ☐ One single family dwelling within the buffer area of a wetland or stream [DMMC 18.86.094(2)].
- ☐ Yard reductions for one single-family dwelling [DMMC 18.86.094(1)(a)].
- ☒ Modification of existing structures [DMMC 18.86.094(5)].

FEE SCHEDULE

DESCRIPTION		FEES
Hearing examiner review	$1,500.00 + $10.00/1,000 sq. ft. of lot area over 1 acre	
Administrative Project Review	$500.00 (single family) $1,500.00 (other)	
Automation Fee	$7.50 (single family) $ 25.00 (commercial)	
Receipt Number:	***Date:***	**Total Fees:**

PERMIT SUBMITTAL REQUIREMENTS

Legal description, tax parcel I.D. numbers, zoning, and acreage of subject property.

☐ Application fee.

☐ Development plans, including site plan and building elevation. The site plan should show the distance from the environmental feature. In the case of a steep slope show the toe or top of the slope. For wetlands, show the wetland boundary and for water bodies please show the ordinary high water mark or the top of the bank of a stream.

☐ Written explanation of the proposal's compliance with the criteria specified by Chapter 18.86 DMMC.

☐ All other plans, special studies, mitigation plans, or other information as required for development within sensitive areas and their buffers (Chapter 18.86 DMMC).

OFFICE USE ONLY

To be completed by Community Development Department staff	
File Number: ESA0002-002	Date received: 4/17/02
Community Development Department review by: CYC	
☐ Approved ☐ Denied ☒ Approved w/ conditions (attach conditions of approval)	Date: 4/18/02

Comments:

EROSION CONTROL AND LANDSCAPING REQUIREMENTS

1. All measures to prevent erosion shall be in place and **inspected prior to any work being done**. **Please call (206) 870-6595 to schedule an inspection.**
2. A silt fence shall be erected along the downgrade side of the bulkhead, leaving enough space for the contractor to work. The bottom 12" of the fence shall be buried into the soil in order to prevent exposed soils from washing into Puget Sound.
3. The owner shall remove or block off any irrigation systems within the wall tiers. The saturated soils can create an excessively heavy load for the bulkhead to retain, and could cause the wall to fail in the future.
4. During times that work is not being performed within the disturbed soils, the slope shall be over-covered with a thick plastic in order to keep the soils from becoming saturated in heavy rains.
5. The owner shall revegetate all disturbed soils after the construction of the wall is complete in order to minimize erosion of the exposed soils.
6. A Plant Selection Guide has been attached to this permit. The plants listed in this guide are specifically selected by the Washington State Department of Ecology for controlling erosion on Puget Sound bluffs. The owner shall use this as a guide for choosing which native vegetation to plant. In the event that the owner wishes to plant vegetation other than those listed, contact Celeste Carlson at (206) 870-6595 to discuss other options.
7. A mulch cover will be required in the newly planted areas. Acceptable methods of mulching are scattered straw, jute netting, wood fiber, or fiber matting.
8. After the bulkhead has been repaired and landscaping installed, schedule a final landscape inspection. **Call (206) 870-6595 for this inspection.**